SN-MV1120HAN-F

12MP Machine Vision Network Camera

Key Features

- 1/1.7” STARVIS™ CMOS
- Max. 12MP(4000×3000) @25/30fps resolution
- Supports face, human, and vehicle detection & capture.
- Supports human and vehicle attribute detection.
- Intelligent analytics: Intrusion, smart motion detection, single line crossing, double line crossing, loitering, wrong-way detection, area people limit, perimeter detection, illegal parking, running detection, fall detection, fight detection, and people counting.
- Built-in microphone, 1/1 audio input/output, 1/1 alarm input/output
- Built-in microSD card slot (up to 1 TB)
- Support auto back focus (ABF)
- Supports 12 VDC / 24 VAC / PoE power supply

Design and specifications are subject to change without notice. The latest product information/ specification can be found at www.sunellsecurity.com
©2025-2026 Shenzhen Sunell Technologies Co., td. Al rights reserved.

Specifications

Camera	
Image Sensor	1/1.7” Progressive Scan CMOS
Max Resolution	12MP, 4000(H) × 3000(V)
Shutter Speed	1/5 to 1/50,000s
Min Illumination	Color: 0.001 Lux @ (F1.2, AGC ON), B/W: 0.0005 Lux @ (F1.2, AGC ON)
Day & Night	Auto (ICR)
Lens	
Lens Type	C/CS mount
Iris	Fixed Iris, Auto Iris
Intelligent Analytics	
AI Multi-Target	- Supports face, human, and vehicle detection & capture - Supports human and vehicle attribute detection - Supports multiple frame modes: Full Frame, Four-Corner Frame, Mosaic
Attribute Extraction	Human Attributes: Gender, age, glasses, hat, bag, upper clothing color & style, lower clothing color & style, reflective vest. Vehicle Attributes: Type, color, brand, orientation
Intelligent Analysis	Intrusion detection, smart motion detection, single line crossing, double line crossing, loitering, wrong-way detection, area people limit, perimeter detection, illegal parking, running detection, fall detection, fight detection - Supports accurate target classification (human/vehicle)
People Counting	Supported
Video & Audio	
Number of Streams	3 Streams
Resolution	Stream1: 4000×3000, 2592×1944, 1280×960 Stream2: D1, VGA, CIF Stream3: VGA, CIF, QVGA
Frame Rate	Up to 25/30fps
Bit Rate Control	CBR/VBR
Bit Rate	Stream1: 200 Kbps to 16 Mbps Stream2: 100 Kbps to 6 Mbps Stream3: 100 Kbps to 3 Mbps
Smart Encoding	Supported
Region of Interest (ROI)	Off/On (8 Zone, Rectangle)
Audio Compression	G.711 A-law, G.711 μ-law, RAW_PCM
Audio Bit Rate	64 Kbps (G.711), 128 Kbps (RAW_PCM)
Image	

Design and specifications are subject to change without notice. The latest product information/ specification can be found at www.sunellsecurity.com
©2025-2026 Shenzhen Sunell Technologies Co., td. Al rights reserved.

Image Adjustment	Brightness, Sharpness, Contrast, Saturation adjustable
Scene Mode	Indoor, Outdoor, Mirror, Corridor mode
Exposure Mode	Auto, Manual, Shutter priority
White Balance	Auto, Tungsten, Fluorescent, Daylight, Shadow, Manual
Day/Night Setting	Auto, Day, Night, Time
Noise Reduction	2D/3D DNR
Image Enhancement	HLC, BLC, Defog, WDR
Wide Dynamic Range	DWDR
Privacy Masking	4 areas
Event	
Alarm Triggers	IVS, Motion detection, Alarm input, Network alarm, Disk alarm, Day/Night switch alarm, Abnormal sound detection
Event Actions	Alarm record, Alarm output, FTP upload, SMTP upload, Snapshot, Audible alarm output
Network	
Protocols	IPv4/IPv6, HTTP/HTTPS, DNS, DDNS, DHCP, PPPoE, RTSP/ RTCP/RTP, TCP/UDP, NTP, ARP, UPnP, FTP, SMTP, QoS, ICMP, IGMP, SMTP, 802.1x, SNMP, Multicast
Application Programming Interface	ONVIF (Profile S/T/G/M), SDK, CGI
Max Concurrent Streams	10 channels
User/Host Level	32+ users, 3 levels: Administrator, Operator, Media user
Web Viewer	<IE11, Chrome, Firefox, Microsoft Edge
Security	
OS / Firmware Protect	Encrypted firmware, Secure boot, Signed firmware
User Authentication	Digest authentication, Prevent brute-force attack
Network Authentication	IEEE 802.1X (EAP-TLS)
Secure Communication	HTTPS, WSS (WebSocket Secure), SRTP
Access Control	IP-based access control, Auto logout
Data Protect	Encryption credentials
Audit	Access / System / Event Log management
Secure Storage	SDcard partition encrypt (AES-256), Secure element
Supply Chain Security	SBOM
Interface	
Network Interface	1 × Ethernet (10/100 Base-T), RJ-45 connector
Built-in Microphone	Supported
Audio Interface	1ch input (line in), 1ch output (line out)
Alarm Interface	1ch input, 1ch output
RS-485	1 RS-485

Design and specifications are subject to change without notice. The latest product information/ specification can be found at www.sunellsecurity.com

©2025-2026 Shenzhen Sunell Technologies Co., td. Al rights reserved.

SD Card Slot	Built-in microSD card slot, up to 1 TB
Reset Button	Supported
General	
Language	English, Chinese, Traditional Chinese, Polish, Italian, Portuguese, Spanish, Russian, French, Czech, Hungarian, Japanese, Korean. Default: English
Power Supply	12 VDC / 24 VAC (-10% to +25%) / PoE (802.3af)
Power Consumption	Typical: 4 W (12 VDC) / approx. 5.8 W (PoE) Max (Focusing): 6.4 W (12 VDC) / approx. 8.2 W (PoE)
Operating Temperature	-30°C to 60°C (-22°F to 140°F)
Operating Humidity	Less than 90% RH
Ingress Protection	N/A
Certifications	CE-EMC - EN 55032, EN IEC 61000-6-4, EN IEC 61000-3-2, EN 61000-3-3, EN 55035, EN 50130-4 FCC 47 CFR Part 15 Subpart B
Material	Aluminum alloy
Dimensions	152.9 × 74.4 × 69.7 mm (6.02 × 2.93 × 2.74 inch)
Net Weight	Approx. 0.4 kg (0.88 lb)

Dimensions (mm)

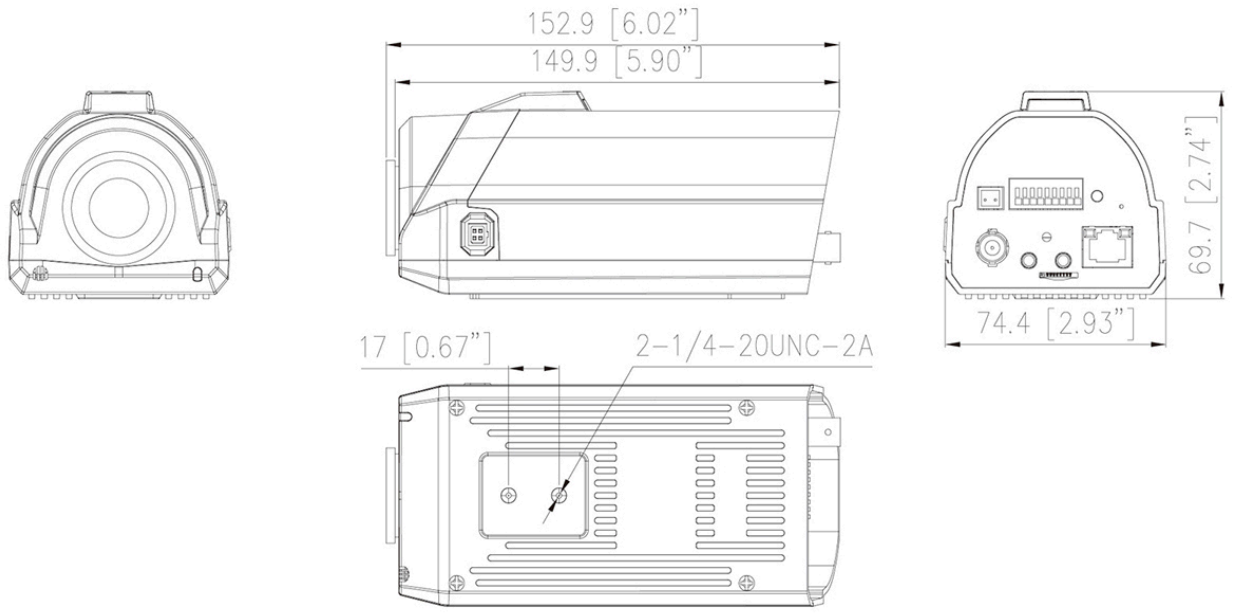

Design and specifications are subject to change without notice. The latest product information/ specification can be found at www.sunellsecurity.com
©2025-2026 Shenzhen Sunell Technologies Co., td. Al rights reserved.

Accessories

Optional:

SN-CH515 Housing	SN-BK385 Wall Mount

Design and specifications are subject to change without notice. The latest product information/ specification can be found at www.sunellsecurity.com
©2025-2026 Shenzhen Sunell Technologies Co., td. Al rights reserved.