SN-BK359

Pole Mount Bracket

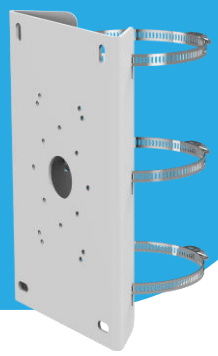

Specification

Parameters	
Application Model	SN-BK348A, SN-CBK504A, SN-CBK506B, SN-BK367
Material	Aluminum alloy, Stainless steel
Color	White
Load Bearing	10 kg (22.0 lb)
Embrace Hoop Diameter	Φ30 to 178 mm (1.18 to 7.01 inch)
Product Dimensions	200 × 67.2 × 320 mm (7.87 × 2.65 × 12.6 inch)
Product Weight	3.2 kg (7.05 lb)

Dimensions (mm)

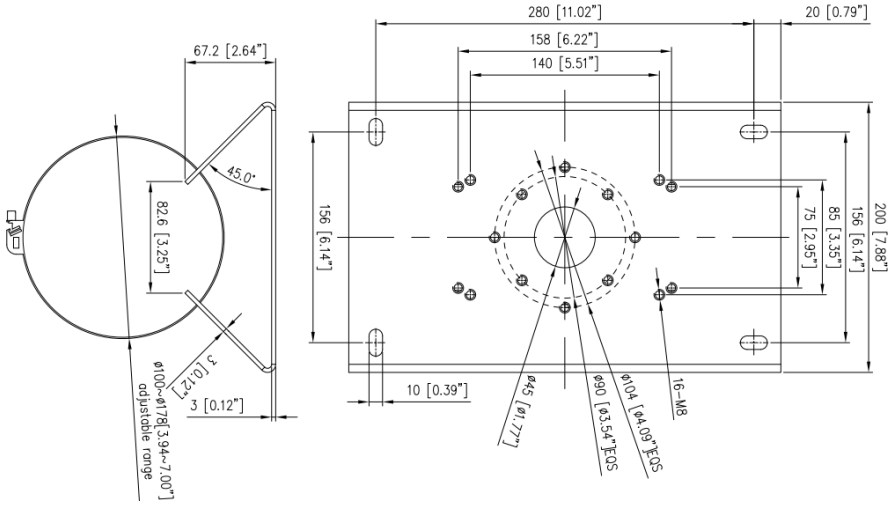

©2025 Sunell all rights reserved. Design and specifications are subject to change without notice. | www.sunellsecurity.com