SN-CBK656A

Junction Box

Specification

Parameters	
Application Model	SN-IPRXXXXBSXX, SN-IPRXXXXBYXX, SN-IPRXXXXBZXX, SN-IPRXXXXKFXX, SN-IPRXXXXCBXX, SN-IPRXXXXHKXX, SN-IPRXXXXQXX, SN-IPVXXXXUXX SN-B13XXBS, SN-B13XXBY, SN-B13XXBZ, SN-B13XXKF, SN-E13XXF
Material	Aluminum alloy
Color	White
Operating Humidity	0% - 90% RH
Load Bearing	3 kg (6.61 lb)
Product Dimensions	ϕ110 × 48 mm (ϕ4.33 × 1.89 inch)
Product Weight	0.3 kg (0.66 lb)

Dimensions (mm)

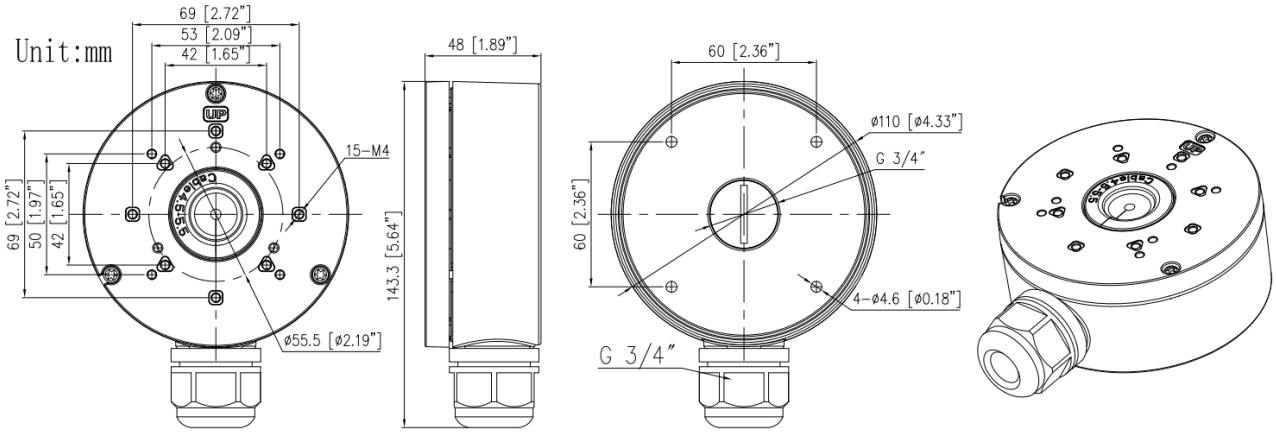

©2025 Sunell all rights reserved. Design and specifications are subject to change without notice. | www.sunellsecurity.com