Box Network Camera

Quick Setup Guide

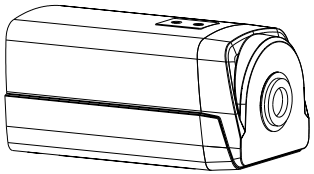

Version:1.2

1 Packing List

Accessories may vary from countries and regions. Please refer to the actual product.

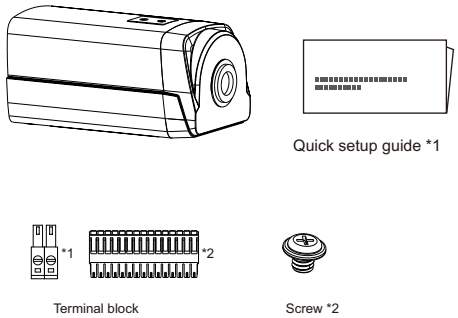

2 Device Port

NOTE

Different devices may have different multi-core cables; The figure is only for your reference, please refer to the actual application scene.

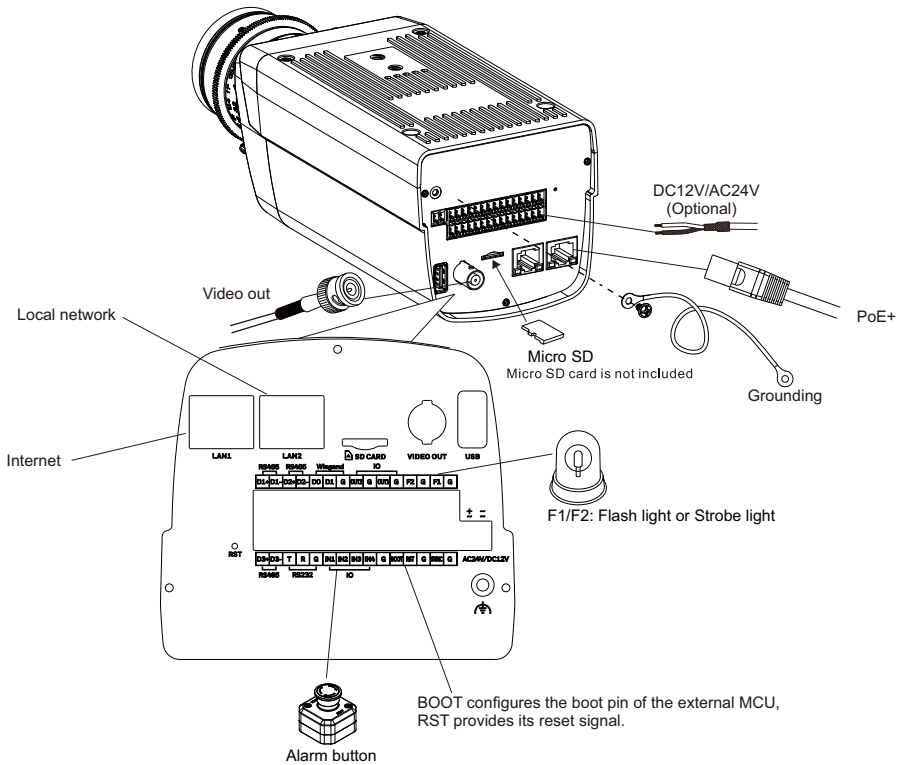

Model 1

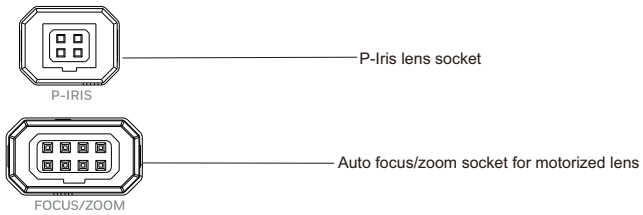

Model 2

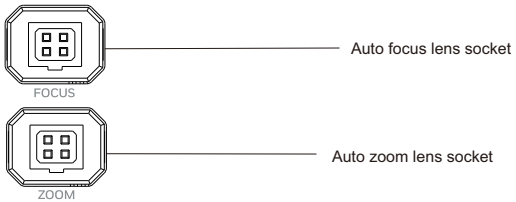

NOTE

All external devices must be powered separately, as the camera does not supply power to them.

3 Device Dimension

NOTE

Different devices may have different dimensions; Please refer to the actual product.

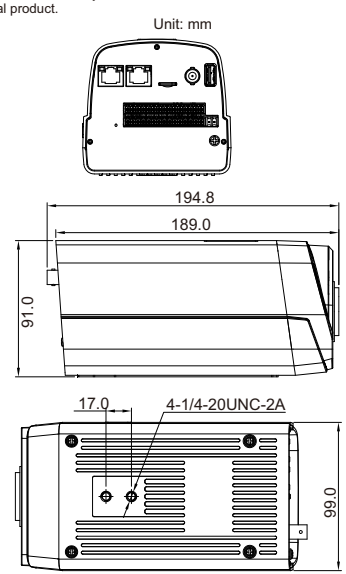

4 Device Installation

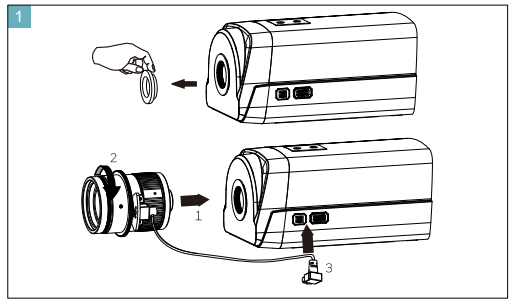

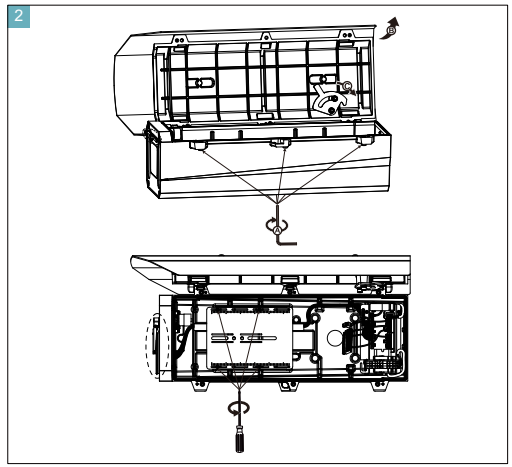

3

Installing Protective hood

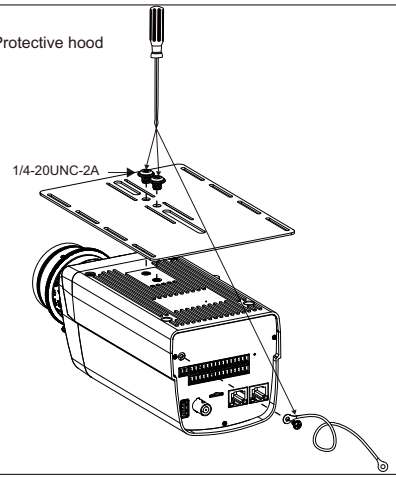

4

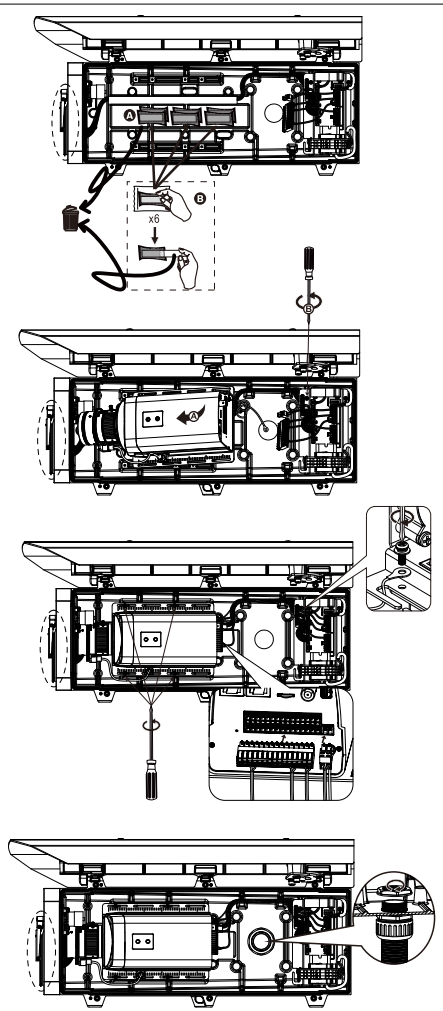

5

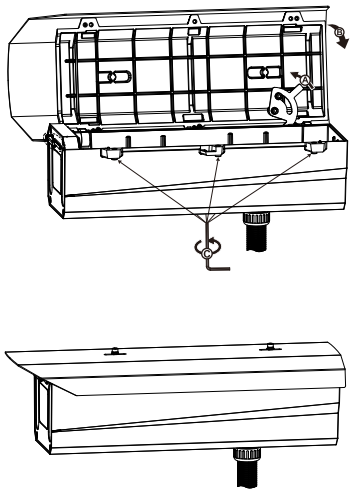

5 Login

1. Open the browser, enter the IP address of camera in the box, and press **Enter** to enter the login interface
2. Create password when you login for the first time, then jump to the login interface
3. Input the user name and password, click login to enter.

NOTE

DHCP is on by default. Please use tool to search IP, the default IP address is 192.168.0.120

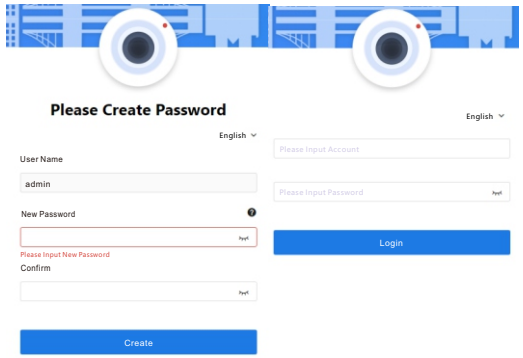

Precautions

Fully understand this document before using this device, and strictly observe rules in this document when using this device. If you install this device in public places, provide the tip "You have entered the area of electronic surveillance" in an eye-catching place. Failure to correctly use electrical products may cause fire and severe injuries.

WARNING	Indicates a medium or low potential hazard which, if not avoided, could result in slight or moderate injury.
CAUTION	Indicates a potential risk which, if not avoided, could result in property damage, data loss, lower performance, or unpredictable result.
NOTE	Provides additional information to emphasize or supplement important points of the main text.

WARNING

- Strictly observe installation requirements when installing the device. The manufacturer shall not be held responsible for device damage caused by users' non-conformance to these requirements.
- Strictly conform to local electrical safety standards and use power adapters that are marked with the LPS standard when installing and using this device. Otherwise, this device may be damaged.
- Use accessories delivered with this device. The voltage must meet input voltage requirements for this device.
- If this device is installed in places with unsteady voltage, ground this device to discharge high energy such as electrical surges in order to prevent the power supply from burning out.
- When this device is in use, ensure that no water or any liquid flows into the device. If water or liquid unexpectedly flows into the device, immediately power off the device and disconnect all cables (such as power cables and network cables) from this device.
- Do not focus strong light (such as lighted bulbs or sunlight) on this device. Otherwise, the service life of the image sensor may be shortened.
- If this device is installed in places where thunder and lightning frequently occur, ground the device nearby to discharge high energy such as thunder strikes in order to prevent device damage.

CAUTION

- Avoid heavy loads, intensive shakes, and soaking to prevent damages during transportation and storage. The warranty does not cover any device damage that is caused during secondary packaging and transportation after the original packaging is taken apart.
- Protect this device from fall-down and intensive strikes, keep the device away from magnetic field interference, and do not install the device in places with shaking surfaces or under shocks.
- Clean the device with a soft dry cloth. For stubborn dirt, dip the cloth into slight neutral cleanser, gently wipe the dirt with the cloth, and then dry the device.
- Do not jam the ventilation opening. Follow the installation instructions provided in this document when installing the device.
- Keep the device away from heat sources such as radiators, electric heaters, or other heat equipment.
- Keep the device away from moist, dusty, extremely hot or cold places, or places with strong electric radiation.
- If the device is installed outdoors, take insect- and moisture-proof measures to avoid circuit board corrosion that can affect monitoring.
- Remove the power plug if the device is idle for a long time.
- Before unpacking, check whether the fragile sticker is damaged. If the fragile sticker is damaged, contact customer services or sales personnel. The manufacturer shall not be held responsible for any artificial damage of the fragile sticker.
- Keep the device ventilation to avoid overheating.
- Do not install the device in extremely hot, cold, dusty, high salinity, high humidity, or corrosive environments; Forbid disassembling the device in these environments.
- If the equipment is disassembled for a long time, or the device is not installed properly after debugging, it will affect the sealing, cause the equipment to fog up and not work properly.

Special Announcement

- All complete products sold by the manufacturer are delivered along with nameplates, quick setup guide and accessories after strict inspection. The manufacturer shall not be held responsible for counterfeit products.
- The manufacturer will update this manual according to product function enhancement or changes and regularly update the software and hardware described in this manual. Update information will be added to new versions of this manual without prior notice.
- This manual may contain misprints, technology information that is not accurate enough, or product function and operation description that is slightly inconsistent with the actual product, the final interpretation of company is as a standard.
- This manual is only for reference and does not ensure that the information is totally consistent with the actual product. For consistency, see the actual product.

NOTE

For more information, please refer to user manual.