SN-IPR8046DQAN-VZ

4MP IR Varifocal Bullet Network Camera



Key Features

- 1/2.8” STARVIS™ CMOS, up to 4MP (2592 × 1520) @ 25/30 fps
- 2.7 to 12 mm motorized focal lens
- Supports face, human, and vehicle detection with snapshot capture
- Intelligent analytics: Intrusion, smart motion detection, single line crossing, double line crossing, loitering, wrong-way detection, area people limit, perimeter detection, illegal parking, running detection, fall detection, fight detection, and people counting.
- True WDR (120dB), 3D DNR, ROI, Defog, HLC
- Smart IR distance up to 60 m
- Built-in mic and speaker, 1/1 audio input/output, 1/1 alarm input/output
- Built-in microSD card slot (up to 1 TB)
- IP66 protection

Product specifications are subject to change without prior notice. For the latest Sunell product information, please visit www.sunellsecurity.com.
© 2026 Shenzhen Sunell Technology Corporation. All rights reserved.

Specifications

Camera	
Image Sensor	1/2.8” Progressive Scan CMOS
Max. Resolution	4MP, 2592(H) × 1520(V)
Shutter Speed	1/5 to 1/20,000s
Min. Illumination	Color: 0.005 Lux @ (F1.6, AGC ON), B/W: 0.001 Lux @ (F1.6, AGC ON), 0 Lux with IR on
Day & Night	Auto (ICR)
Angle Adjustment	Pan: 0° to 360°, Tilt: 0° to 90°, Rotation: 0° to 360°
Lens	
Lens Type	Varifocal lens, Motorized focal
Focal Length	2.7 to 12 mm
Max. Aperture	F1.6
Field of View (FOV)	H: 95.6° to 30.7°, V: 51.4° to 17.2°
Iris	Auto Iris
Illuminator	
Illuminator Type	IR
IR wavelength	850 nm
Illumination Distance	Up to 60 m (196.9 ft)
Illuminator Control	Auto/Manual
Intelligent Analytics	
AI Multi-Target Detection	- Supports face, human, and vehicle detection with snapshot capture - Supports tracking display modes: Full Frame, Four-Corner Frame, and Mosaic
Intelligent Analysis	Intrusion, smart motion detection, single line crossing, double line crossing, loitering, wrong-way detection, area people limit, perimeter detection, illegal parking, running detection, fall detection, and fight detection. - Supports accurate human and vehicle classification
People Counting	Supported
Video & Audio	
Number of Streams	3 Streams
Resolution	Stream1: 2592×1520, 2560×1440, 2304×1296, 1920×1080, 1280×720 Stream2: D1, VGA, CIF Stream3: VGA, CIF, QVGA
Frame Rate	Up to 25/30fps
Bit Rate Control	CBR/VBR

Product specifications are subject to change without prior notice. For the latest Sunell product information, please visit www.sunellsecurity.com.
© 2026 Shenzhen Sunell Technology Corporation. All rights reserved.

Bit Rate	Stream1: 200 Kbps to 12 Mbps Stream2: 100 Kbps to 6 Mbps Stream3: 100 Kbps to 3 Mbps
Smart Encoding	Supported
Region of Interest (ROI)	Off/On (8 Zone, Rectangle)
Audio Compression	G.711 A-law, G.711 μ-law, RAW_PCM
Audio Bit Rate	64 Kbps (G.711), 128 Kbps (RAW_PCM)
Image	
Image Adjustment	Brightness, Sharpness, Contrast, Saturation adjustable
Scene Mode	Indoor, Outdoor, Mirror, Corridor mode
Exposure Mode	Auto, Manual, Shutter priority
White Balance	Auto, Tungsten, Fluorescent, Daylight, Shadow, Manual
Day/Night Setting	Auto, Day, Night, Timer
Noise Reduction	2D/3D DNR
Image Enhancement	HLC, BLC, Defog, WDR
Wide Dynamic Range	True WDR (120dB)
Privacy Masking	4 areas
Event	
Alarm Triggers	IVS, Motion detection, Alarm input, Network alarm, Disk alarm, Day/Night switch alarm, Abnormal sound detection
Event Actions	Alarm record, Alarm output, FTP upload, Email notification, Snapshot, Audible alarm output
Network	
Protocols	IPv4/IPv6, HTTP/HTTPS, DNS, DDNS, DHCP, PPPoE, RTSP/ RTCP/RTP, TCP/UDP, NTP, ARP, UPnP, FTP, SMTP, QoS, ICMP, IGMP, SMTP, 802.1x, SNMP, Multicast
Application Programming Interface	ONVIF (Profile S/T/G/M), SDK, CGI
Max Concurrent Streams	10 channels
User/Host Level	32+ users, 3 levels: Administrator, Operator, Media user
Web Viewer	<IE11, Chrome, Firefox, Microsoft Edge
Security	
OS / Firmware Protect	Encrypted firmware, Secure boot, Signed firmware
User Authentication	Digest authentication, Brute-force attack protection
Network Authentication	IEEE 802.1X (EAP-TLS)
Secure Communication	HTTPS, WSS (WebSocket Secure), SRTP
Access Control	IP-based access control, Auto logout
Data Protect	Encryption credentials
Audit	Access, system, and event log management
Secure Storage	AES-256 encrypted SD card storage

Product specifications are subject to change without prior notice. For the latest Sunell product information, please visit www.sunellsecurity.com.
© 2026 Shenzhen Sunell Technology Corporation. All rights reserved.

Supply Chain Security	SBOM
Interface	
Network Interface	1 × Ethernet (10/100 Base-T), RJ-45 connector
Built-in Microphone	Supported
Built-in Speaker	Supported
Audio Interface	1ch Input, 1ch Output
Alarm Interface	1ch Input, 1ch Output
SD Card Slot	Built-in microSD card slot, up to 1 TB
Reset Button	Supported
General	
Language	English, Chinese, Traditional Chinese, Polish, Italian, Portuguese, Spanish, Russian, French, Czech, Hungarian, Japanese, Korean. Default: English
Power Supply	12 VDC (-10% to +25%) / PoE (802.3af)
Power Consumption	Basic: Max 3 W (without light) Max. (Focus + WDR + Speaker + IR on): 10 W
Operating Temperature	-40 ℃ to 60 ℃ (-40 ℉ to 140 ℉)
Operating Humidity	≤ 95% RH (Non-condensing)
Ingress Protection	IP66
Certifications	CE-EMC - EN 55032, EN IEC 61000-6-4, EN IEC 61000-3-2, EN 61000-3-3, EN 55035, EN 50130-4 FCC 47 CFR Part 15 Subpart B
Material	Aluminum alloy housing; PC components
Dimensions	303 × 100 × 107 mm (11.9 × 3.94 × 4.21 inch)
Net Weight	Approx. 1.25 kg (2.76 lb)
DORI Distance (EN 62676-4 standard)	
Detect	67 to 198 m (219.8 to 649.6 ft)
Observe	26.8 to 79.2 m (87.9 to 259.8 ft)
Recognize	13.4 to 39.6 m (44.0 to 129.9 ft)
Identify	6.7 to 19.8 m (22.0 to 65.0 ft)

Product specifications are subject to change without prior notice. For the latest Sunell product information, please visit www.sunellsecurity.com.
© 2026 Shenzhen Sunell Technology Corporation. All rights reserved.

Dimensions (mm)

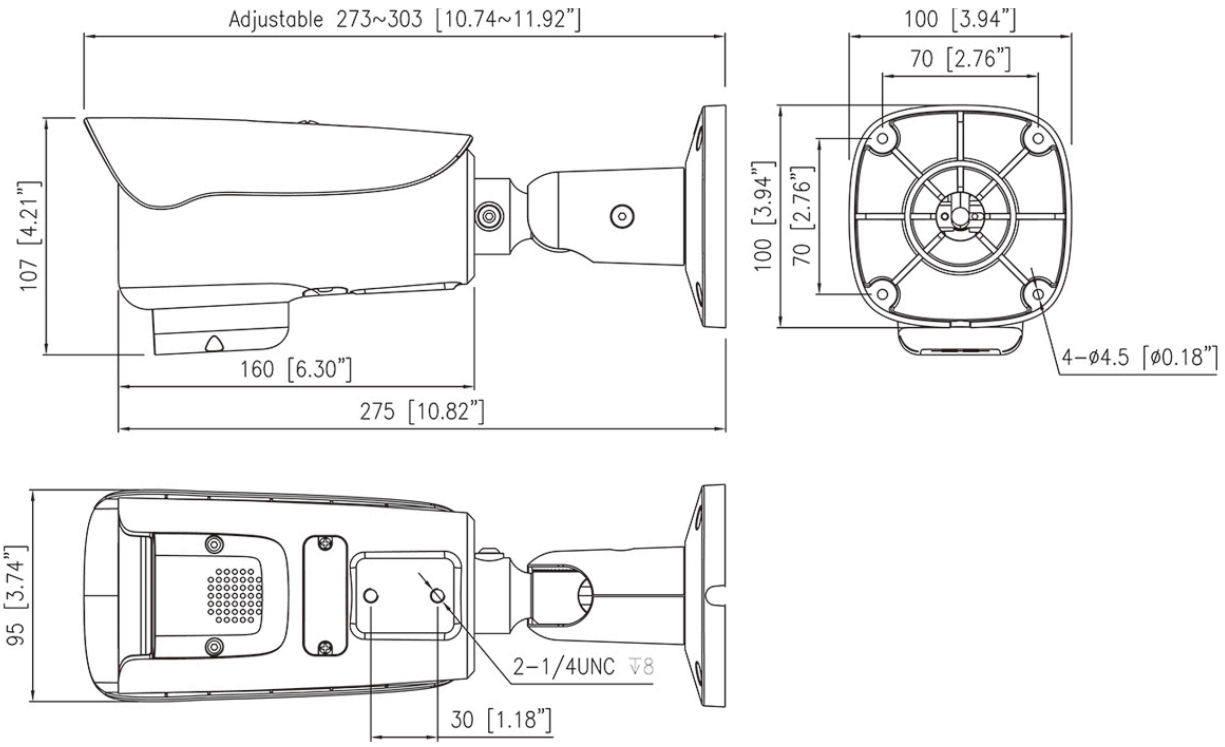

Accessories

Optional:

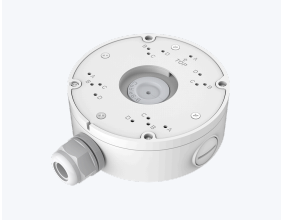

SN-CBK645G

Junction Box



SN-CBK627D

Pole Mount Bracket

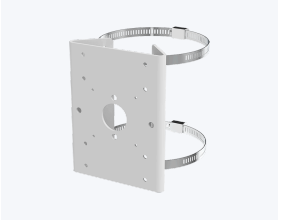

SN-CBK101

Pole Mount Bracket



SN-CBK102

Corner Mount Bracket

Product specifications are subject to change without prior notice. For the latest Sunell product information, please visit www.sunellsecurity.com.
© 2026 Shenzhen Sunell Technology Corporation. All rights reserved.