SN-IPV8046HCAR-B

4MP IR Fixed Turret Network Camera



Key Features

- 1/2.8” STARVIS™ CMOS, up to 4MP (2592 × 1520) @ 25/30 fps
- Supports face, human, and vehicle detection with snapshot capture
- Intelligent analytics: Intrusion, smart motion detection, single line crossing, double line crossing, loitering, wrong-way detection, area people limit, perimeter detection, illegal parking, running detection, fall detection, fight detection, and people counting.
- True WDR (120dB), 3D DNR, ROI, Defog, HLC
- Smart IR distance up to 30 m
- Built-in microphone, 1/1 audio input/output, 1/1 alarm input/output
- Built-in microSD card slot (up to 1 TB)
- IP67-rated housing

Product specifications are subject to change without prior notice. For the latest Sunell product information, please visit www.sunellsecurity.com.
© 2026 Shenzhen Sunell Technology Corporation. All rights reserved.

Specifications

Camera	
Image Sensor	1/2.8” Progressive Scan CMOS
Max. Resolution	4MP, 2592(H) × 1520(V)
Shutter Speed	1/5 to 1/20,000s
Min. Illumination	Color: 0.005 Lux @ (F1.6, AGC ON), B/W: 0.001 Lux @ (F1.6, AGC ON), 0 Lux with IR on
Day & Night	Auto (ICR)
Angle Adjustment	Pan: 0° to 355°, Tilt: 0° to 80°, Rotation: 0° to 360°
Lens	
Lens Type	Fixed lens, Fixed focal
Focal Length	2.8 mm, 4 mm optional
Max. Aperture	F2.0 / F1.6
Field of View (FOV)	2.8 mm: - H: 91.8°, V: 52.3° 4 mm: - H: 79.2°, V: 42.4°
Iris	Fixed Iris
Illuminator	
Illuminator Type	IR
IR wavelength	850 nm
Illumination Distance	Up to 30 m (98.4 ft)
Illuminator Control	Auto/Manual
Intelligent Analytics	
AI Multi-Target Detection	- Supports face, human, and vehicle detection with snapshot capture - Supports tracking display modes: Full Frame, Four-Corner Frame, and Mosaic
Intelligent Analysis	Intrusion, smart motion detection, single line crossing, double line crossing, loitering, wrong-way detection, area people limit, perimeter detection, illegal parking, running detection, fall detection, and fight detection. - Supports accurate human and vehicle classification
People Counting	Supported
Video & Audio	
Number of Streams	3 Streams
Resolution	Stream1: 2592×1520, 2560×1440, 2304×1296, 1920×1080, 1280×720 Stream2: D1, VGA, CIF Stream3: VGA, CIF, QVGA
Frame Rate	Up to 25/30fps

Product specifications are subject to change without prior notice. For the latest Sunell product information, please visit www.sunellsecurity.com.
© 2026 Shenzhen Sunell Technology Corporation. All rights reserved.

Bit Rate Control	CBR/VBR
Bit Rate	Stream1: 200 Kbps to 12 Mbps Stream2: 100 Kbps to 6 Mbps Stream3: 100 Kbps to 3 Mbps
Smart Encoding	Supported
Region of Interest (ROI)	Off/On (8 Zone, Rectangle)
Audio Compression	G.711 A-law, G.711 μ-law, RAW_PCM
Audio Bit Rate	64 Kbps (G.711), 128 Kbps (RAW_PCM)
Image	
Image Adjustment	Brightness, Sharpness, Contrast, Saturation adjustable
Scene Mode	Indoor, Outdoor, Mirror, Corridor mode
Exposure Mode	Auto, Manual, Shutter priority
White Balance	Auto, Tungsten, Fluorescent, Daylight, Shadow, Manual
Day/Night Setting	Auto, Day, Night, Timer
Noise Reduction	2D/3D DNR
Image Enhancement	HLC, BLC, Defog, WDR
Wide Dynamic Range	True WDR (120dB)
Privacy Masking	4 areas
Event	
Alarm Triggers	IVS, Motion detection, Alarm input, Network alarm, Disk alarm, Day/Night switch alarm, Abnormal sound detection
Event Actions	Alarm record, Alarm output, FTP upload, Email notification, Snapshot, Audible alarm output
Network	
Protocols	IPv4/IPv6, HTTP/HTTPS, DNS, DDNS, DHCP, PPPoE, RTSP/ RTCP/RTP, TCP/UDP, NTP, ARP, UPnP, FTP, SMTP, QoS, ICMP, IGMP, SMTP, 802.1x, SNMP, Multicast
Application Programming Interface	ONVIF (Profile S/T/G/M), SDK, CGI
Max Concurrent Streams	10 channels
User/Host Level	32+ users, 3 levels: Administrator, Operator, Media user
Web Viewer	<IE11, Chrome, Firefox, Microsoft Edge
Security	
OS / Firmware Protect	Encrypted firmware, Secure boot, Signed firmware
User Authentication	Digest authentication, Brute-force attack protection
Network Authentication	IEEE 802.1X (EAP-TLS)
Secure Communication	HTTPS, WSS (WebSocket Secure), SRTP
Access Control	IP-based access control, Auto logout
Data Protect	Encryption credentials
Audit	Access, system, and event log management

Product specifications are subject to change without prior notice. For the latest Sunell product information, please visit www.sunellsecurity.com.
© 2026 Shenzhen Sunell Technology Corporation. All rights reserved.

Secure Storage	AES-256 encrypted SD card storage
Supply Chain Security	SBOM
Interface	
Network Interface	1 × Ethernet (10/100 Base-T), RJ-45 connector
Built-in Microphone	Supported
Audio Interface	1ch Input, 1ch Output
Alarm Interface	1ch Input, 1ch Output
SD Card Slot	Built-in microSD card slot, up to 1 TB
Reset Button	Supported
General	
Language	English, Chinese, Traditional Chinese, Polish, Italian, Portuguese, Spanish, Russian, French, Czech, Hungarian, Japanese, Korean. Default: English
Power Supply	12 VDC (-10% to +25%)/PoE (802.3af)
Power Consumption	Max 6 W
Operating Temperature	-40 °C to 60 °C (-40 °F to 140 °F)
Operating Humidity	≤ 95% RH (Non-condensing)
Ingress Protection	IP67 (housing)
Certifications	CE-EMC - EN 55032, EN IEC 61000-6-4, EN IEC 61000-3-2, EN 61000-3-3, EN 55035, EN 50130-4 FCC 47 CFR Part 15 Subpart B
Material	Aluminum alloy housing; PC components
Dimensions	φ118.2 × 93.9 mm (4.65 × 3.7 inch)
Net Weight	Approx. 0.55 kg (1.21 lb)
DORI Distance (EN 62676-4 standard)	
Detect	2.8 mm: 64 m (210.0 ft) 4 mm: 84 m (275.6 ft)
Observe	2.8 mm: 25.6 m (84.0 ft) 4 mm: 33.6 m (110.2 ft)
Recognize	2.8 mm: 12.8 m (42.0 ft) 4 mm: 16.8 m (55.1 ft)
Identify	2.8 mm: 6.4 m (21.0 ft) 4 mm: 8.4 m (27.6 ft)

Product specifications are subject to change without prior notice. For the latest Sunell product information, please visit www.sunellsecurity.com.
© 2026 Shenzhen Sunell Technology Corporation. All rights reserved.

Dimensions (mm)

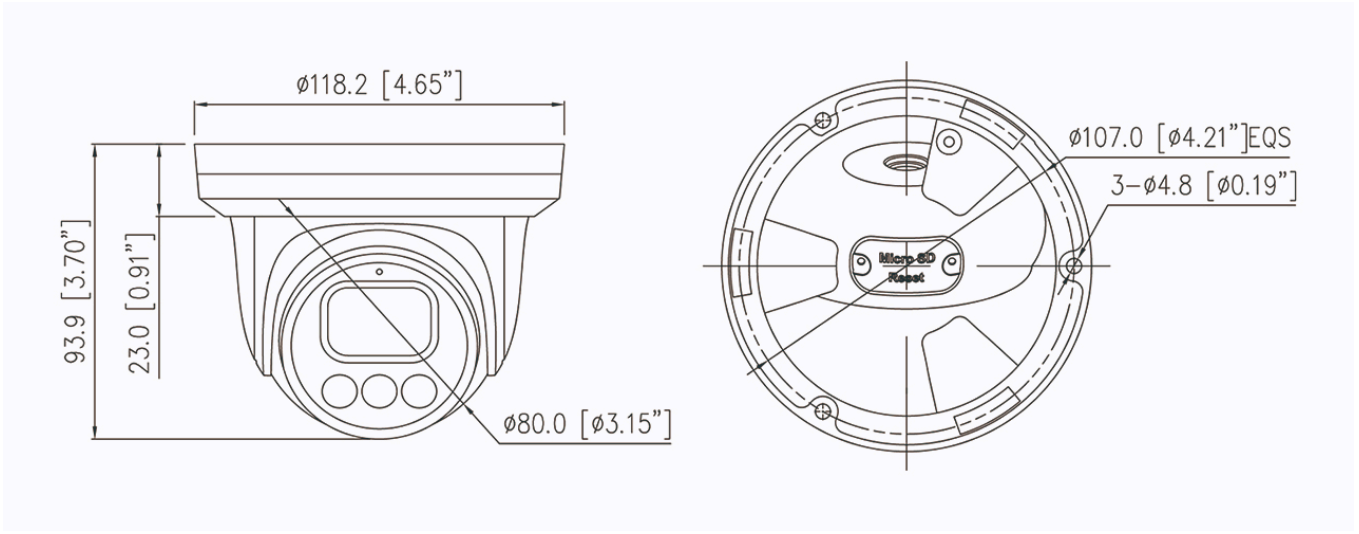

Accessories

Optional:



SN-CBK646M

Junction Box



SN-BK382A

Wall Mount Bracket



SN-CBK203

Pendant Cap



SN-CBK402

Ceiling Mount Bracket



SN-CBK501

Wall Mount Bracket



SN-CBK502

Wall Mount Bracket

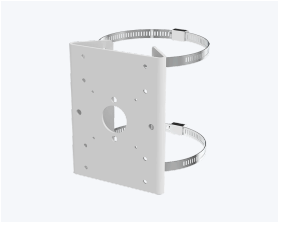

SN-CBK101

Pole Mount Bracket

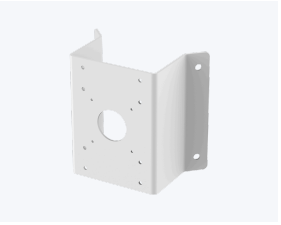

SN-CBK102

Corner Mount Bracket

Product specifications are subject to change without prior notice. For the latest Sunell product information, please visit www.sunellsecurity.com.
© 2026 Shenzhen Sunell Technology Corporation. All rights reserved.