SN-IPV8084HDAF-Z

8MP Starlight IR Active Deterrence Turret Network Camera

Key Features

- 1/1.8” STARVIS™ CMOS, up to 8MP (3840 × 2160) @ 25/30 fps
- Supports face, human, and vehicle detection with snapshot capture
- Supports human and vehicle attribute analysis
- Intelligent analytics: Intrusion, smart motion detection, single line crossing, double line crossing, loitering, wrong-way detection, area people limit, perimeter detection, illegal parking, running detection, fall detection, fight detection, and people counting.
- True WDR (120dB), 3D DNR, ROI, Defog, HLC
- Smart IR distance up to 40 m
- Built-in microphone, 1/1 audio input/output, 1/1 alarm input/output
- Supports red and blue warning lights for active deterrence
- Built-in microSD card slot (up to 1 TB)
- IP67-rated housing

Product specifications are subject to change without prior notice. For the latest Sunell product information, please visit www.sunellsecurity.com.
© 2026 Shenzhen Sunell Technology Corporation. All rights reserved.

Specifications

Camera	
Image Sensor	1/1.8” Progressive Scan CMOS
Max. Resolution	8MP, 3840(H) × 2160(V)
Shutter Speed	1/5 to 1/20,000s
Min. Illumination	Color: 0.003 Lux @ (F1.3, AGC ON), B/W: 0.0008 Lux @ (F1.3, AGC ON), 0 Lux with IR on
Day & Night	Auto (ICR)
Angle Adjustment	Pan: 0° to 360°, Tilt: 0° to 80°, Rotation: 0° to 360°
Lens	
Lens Type	Varifocal lens, Motorized focal
Focal Length	3.6 to 11 mm
Max. Aperture	F1.3
Field of View (FOV)	H: 112.6° to 47.9°, V: 58.2° to 26.8°
Iris	Fixed Iris
Illuminator	
Illuminator Type	IR
IR wavelength	850 nm
Illumination Distance	Up to 40 m (131.2 ft)
Illuminator Control	Auto/Manual
Intelligent Analytics	
AI Multi-Target Detection	- Supports face, human, and vehicle detection with snapshot capture - Supports human and vehicle attribute analysis - Supports tracking display modes: Full Frame, Four-Corner Frame, and Mosaic
Attribute Analysis	Human Attributes: Gender, age, glasses, hat, bag, upper clothing color & style, lower clothing color & style, reflective vest Vehicle Attributes: Type, color, brand, orientation
Intelligent Analysis	Intrusion detection, smart motion detection, single line crossing, double line crossing, loitering, wrong-way detection, area people limit, perimeter detection, illegal parking, running detection, fall detection, fight detection - Supports alarm triggering based on specified target types (human/vehicle)
People Counting	Supported
Video & Audio	
Number of Streams	3 Streams
Resolution	Stream1: 3840×2160, 2592×1944, 2592×1520, 2560×1440, 2304×1296, 1920×1080, 1280×720 Stream2: D1, VGA, CIF Stream3: VGA, CIF, QVGA

Product specifications are subject to change without prior notice. For the latest Sunell product information, please visit www.sunellsecurity.com.

© 2026 Shenzhen Sunell Technology Corporation. All rights reserved.

Frame Rate	Up to 25/30fps
Bit Rate Control	CBR/VBR
Bit Rate	Stream1: 200 Kbps to 16 Mbps Stream2: 100 Kbps to 6 Mbps Stream3: 100 Kbps to 3 Mbps
Smart Encoding	Supported
Region of Interest (ROI)	Off/On (8 Zone, Rectangle)
Audio Compression	G.711 A-law, G.711 μ-law, RAW_PCM
Audio Bit Rate	64 Kbps (G.711), 128 Kbps (RAW_PCM)
Image	
Image Adjustment	Brightness, Sharpness, Contrast, Saturation adjustable
Scene Mode	Indoor, Outdoor, Mirror, Corridor mode
Exposure Mode	Auto, Manual, Shutter priority
White Balance	Auto, Tungsten, Fluorescent, Daylight, Shadow, Manual
Day/Night Setting	Auto, Day, Night, Timer
Noise Reduction	2D/3D DNR
Image Enhancement	HLC, BLC, Defog, WDR
Wide Dynamic Range	True WDR (120dB)
Privacy Masking	4 areas
Event	
Alarm Triggers	IVS, Motion detection, Alarm input, Network alarm, Disk alarm, Day/Night switch alarm, Abnormal sound detection
Event Actions	Alarm record, Alarm output, FTP upload, SMTP upload, Snapshot, Audible alarm output, Red and Blue light alarm
Network	
Protocols	IPv4/IPv6, HTTP/HTTPS, DNS, DDNS, DHCP, PPPoE, RTSP/ RTCP/RTP, TCP/UDP, NTP, ARP, UPnP, FTP, SMTP, QoS, ICMP, IGMP, SMTP, 802.1x, SNMP, Multicast
Application Programming Interface	ONVIF (Profile S/T/G/M), SDK, CGI
Max Concurrent Streams	10 channels
User/Host Level	32+ users, 3 levels: Administrator, Operator, Media user
Web Viewer	<IE11, Chrome, Firefox, Microsoft Edge
Security	
OS / Firmware Protect	Encrypted firmware, Secure boot, Signed firmware
User Authentication	Digest authentication, Brute-force attack protection
Network Authentication	IEEE 802.1X (EAP-TLS)
Secure Communication	HTTPS, WSS (WebSocket Secure), SRTP
Access Control	IP-based access control, Auto logout

Product specifications are subject to change without prior notice. For the latest Sunell product information, please visit www.sunellsecurity.com.
© 2026 Shenzhen Sunell Technology Corporation. All rights reserved.

Data Protect	Encryption credentials
Audit	Access, system, and event logs
Secure Storage	AES-256 encrypted SD card storage
Supply Chain Security	SBOM
Interface	
Network Interface	1 × Ethernet (10/100 Base-T), RJ-45 connector
Built-in Microphone	Supported
Audio Interface	1 input (3.5 mm), 1 output (3.5 mm)
Alarm Interface	1 input, 1 output
SD Card Slot	Built-in microSD card slot (up to 1 TB)
Reset Button	Supported
General	
Language	English, Chinese, Traditional Chinese, Polish, Italian, Portuguese, Spanish, Russian, French, Czech, Hungarian, Japanese, Korean. Default: English
Power Supply	12 VDC (-10% to +25%) / PoE (802.3af)
Power Consumption	Typical: 3 W (12 VDC) / approx. 3.8 W (PoE) Max (IR on + R/B on + Focusing): 7.1 W (12 VDC) / approx. 8.2 W (PoE)
Operating Temperature	-40 °C to 60 °C (-40 °F to 140 °F)
Operating Humidity	< 95% RH, non-condensing
Ingress Protection	IP67 (housing)
Certifications	CE-EMC - EN 55032, EN IEC 61000-6-4, EN IEC 61000-3-2, EN 61000-3-3, EN 55035, EN 50130-4 FCC 47 CFR Part 15 Subpart B
Material	Aluminum alloy housing; PC components
Dimensions	φ140 × 119.2 mm (5.51 × 4.69 inch)
Net Weight	Approx. 0.9 kg (1.98 lb)
DORI Distance (EN 62676-4 standard)	
Detect	89.1 to 189.3 m (292.4 to 621.2 ft)
Observe	35.6 to 75.7 m (116.9 to 248.5 ft)
Recognize	17.8 to 37.9 m (58.5 to 124.2 ft)
Identify	8.9 to 18.9 m (29.2 to 62.1 ft)

Product specifications are subject to change without prior notice. For the latest Sunell product information, please visit www.sunellsecurity.com.
© 2026 Shenzhen Sunell Technology Corporation. All rights reserved.

Dimensions (mm)

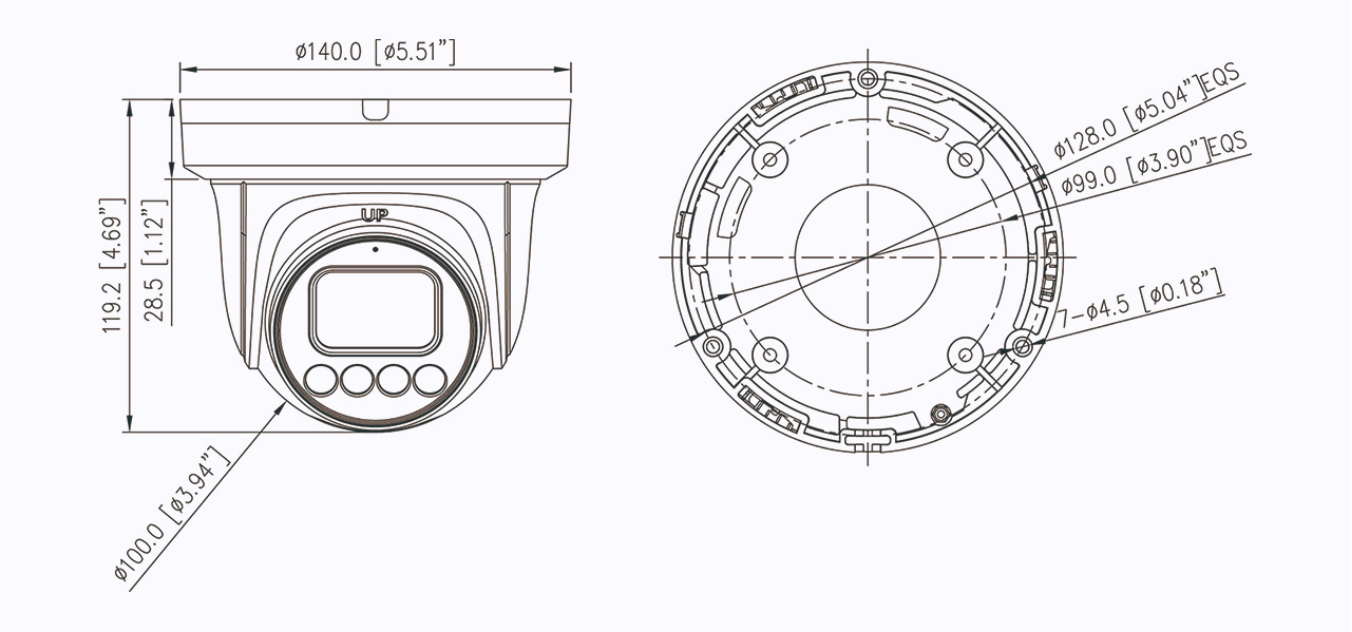

Accessories

Optional:

SN-CBK645G

Junction Box

SN-CBK206

Pendant Cap

SN-CBK402

Ceiling Mount Bracket

SN-CBK501

Wall Mount Bracket

SN-CBK502

Wall Mount Bracket

SN-CBK101

Pole Mount Bracket

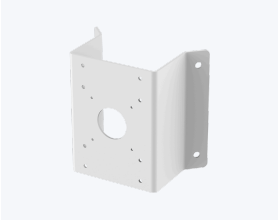

SN-CBK102

Corner Mount Bracket

Product specifications are subject to change without prior notice. For the latest Sunell product information, please visit www.sunellsecurity.com.
© 2026 Shenzhen Sunell Technology Corporation. All rights reserved.