SN-IPV8153EEAS-Z

5MP Smart Dual Illumination Dome Network Camera

Key Features

- 1/2.7” progressive scan CMOS, up to 5MP (2880 × 1620) @ 25/30 fps
- Supports face, human, and vehicle detection with snapshot capture
- Intelligent analytics: Intrusion, smart motion detection, single line crossing, double line crossing, loitering, wrong-way detection, illegal parking, area people limit, perimeter detection, and people counting.
- True WDR(120dB), 3D DNR, ROI, HLC, BLC, Defog
- Built-in IR and warm light illumination up to 40 m
- Built-in microphone, 1/1 audio I/O, and 1/1 alarm I/O
- Built-in microSD card slot supporting up to 1 TB
- IP67, IK10-rated housing

Product specifications are subject to change without prior notice. For the latest Sunell product information, please visit www.sunellsecurity.com.
© 2026 Shenzhen Sunell Technology Corporation. All rights reserved.

Specifications

Camera	
Image Sensor	1/2.7” Progressive Scan CMOS
Max. Resolution	5MP, 2880(H) × 1620(V)
Shutter Speed	1/5 to 1/20,000s
Min. Illumination	Color: 0.01 Lux @ (F1.6, AGC ON), B/W: 0.005 Lux @ (F1.6, AGC ON), 0 Lux with illuminator on
Day & Night	Auto (ICR)
Angle Adjustment	Pan: 0° to 355°, Tilt: 0° to 75°, Rotation: 0° to 355°
Lens	
Lens Type	Varifocal lens, motorized focal
Focal Length	2.7 to 13.5 mm
Max. Aperture	F1.6
Field of View (FOV)	H: 103.7° to 33.6°, V: 55.3° to 18.7°
Iris	Fixed Iris
Illuminator	
Illuminator Type	IR, Warm light
IR wavelength	850 nm
Illumination Distance	IR distance up to 40 m (131.2 ft) Warm light distance up to 20 m (65.6 ft)
Illuminator Control	IR mode, White mode, Intelligent mode, None
Intelligent Analytics	
AI Multi-Target Detection	- Supports face, human, and vehicle detection with snapshot capture - Supports tracking display modes: Full Frame, Four-Corner Frame, and Mosaic
Intelligent Analysis	Intrusion, smart motion detection, single line crossing, double line crossing, loitering, wrong-way detection, illegal parking, area people limit, and perimeter detection - Supports alarm triggering based on specified target types (human/vehicle)
People Counting	Supported
Video & Audio	
Number of Streams	3 Streams
Resolution	Stream 1: 2880 × 1620, 2304 × 1296, 1920 × 1080, 1280 × 720 Stream 2: D1, VGA, CIF Stream 3: VGA, CIF, QVGA
Frame Rate	Up to 25/30 fps
Bit Rate Control	CBR/VBR

Product specifications are subject to change without prior notice. For the latest Sunell product information, please visit www.sunellsecurity.com.
© 2026 Shenzhen Sunell Technology Corporation. All rights reserved.

Bit Rate	Stream 1: 200 Kbps to 12 Mbps Stream 2: 100 Kbps to 6 Mbps Stream 3: 100 Kbps to 3 Mbps
Smart Encoding	Supported
Region of Interest (ROI)	Up to 8 zones
Audio Compression	G.711 A-law, G.711 µ-law, RAW_PCM
Audio Bit Rate	64 Kbps (G.711), 128 Kbps (RAW_PCM)
Image	
Image Adjustment	Brightness, Sharpness, Contrast, Saturation adjustable
Scene Mode	Indoor, Outdoor, Mirror, Corridor mode
Exposure Mode	Auto, Manual, Shutter priority
White Balance	Auto, Tungsten, Fluorescent, Daylight, Shadow, Manual
Day/Night Setting	Auto, Day mode, Night mode, Timer
Noise Reduction	2D/3D DNR
Image Enhancement	WDR, HLC, BLC, Defog
Wide Dynamic Range	True WDR (120 dB)
Privacy Masking	Up to 4 configurable zones
Event	
Alarm Triggers	IVS, Motion detection, Alarm input, Disk alarm, Network alarm, Day/Night switch alarm, Abnormal sound detection
Event Actions	Alarm record, FTP upload, Email notification, Alarm output, Snapshot, Audible alarm output, White light alarm output
Network	
Protocols	IPv4/IPv6, HTTP/HTTPS, DNS, DDNS, DHCP, PPPoE, RTSP/ RTCP/RTP, TCP/UDP, NTP, ARP, UPnP, FTP, SMTP, QoS, ICMP, IGMP, SMTP, 802.1x, SNMP, Multicast
Application Programming Interface	ONVIF (Profile S/T/G/M), SDK, CGI
Max Concurrent Streams	10 channels
User/Host Level	32+ users, 3 user levels: Administrator, Operator, and Media User
Web Viewer	Chrome, Firefox, Microsoft Edge, IE11 or earlier
Security	
OS / Firmware Protect	Encrypted firmware, Secure boot, Signed firmware
User Authentication	Digest authentication, Brute-force attack protection
Network Authentication	IEEE 802.1X (EAP-TLS)
Secure Communication	HTTPS, WSS (WebSocket Secure), SRTP
Access Control	IP-based access control, Auto logout
Data Protect	Encryption credentials
Audit	Access, system, and event logs

Product specifications are subject to change without prior notice. For the latest Sunell product information, please visit www.sunellsecurity.com.
© 2026 Shenzhen Sunell Technology Corporation. All rights reserved.

Secure Storage	AES-256 encrypted SD card storage
Supply Chain Security	SBOM
Interface	
Network Interface	1 × RJ45 10/100 Mbps Ethernet port
Built-in Microphone	Supported
Audio Interface	1 input (3.5 mm), 1 output (3.5 mm)
Alarm Interface	1 input, 1 output
SD Card Slot	Built-in microSD card slot (up to 1 TB)
Reset Button	Supported
General	
Language	English, Chinese, Traditional Chinese, Polish, Italian, Portuguese, Spanish, Russian, French, Czech, Hungarian, Japanese, Korean. Default: English
Power Supply	12 VDC (-15% to +25%)/PoE (802.3af)
Power Consumption	Typical: 2.0 W (IR off, 12 VDC) / approx. 2.5 W (PoE) Max: 5.2 W (IR on, 12 VDC) / approx. 6.5 W (PoE)
Operating Temperature	-30 °C to 60 °C (-22 °F to 140 °F)
Operating Humidity	≤ 95% RH (Non-condensing)
Ingress Protection	IP67 (housing), IK10
Certifications	CE-EMC: EN 55032, EN IEC 61000-6-4, EN IEC 61000-6-2, EN 55035, EN 50130-4 FCC 47 CFR Part 15 Subpart B
Material	Aluminum alloy housing; PC dome cover
Dimensions	φ130 × 113.3 mm (φ5.12 × 4.46 inch)
Net Weight	Approx. 785 g (1.73 lb)
DORI Distance (EN 62676-4 standard)	
Detect	67 to 205 m (219.8 to 672.6 ft)
Observe	26.8 to 82 m (87.9 to 269.0 ft)
Recognize	13.4 to 41 m (44.0 to 134.5 ft)
Identify	6.7 to 20.5 m (22.0 to 67.3 ft)

Product specifications are subject to change without prior notice. For the latest Sunell product information, please visit www.sunellsecurity.com.
© 2026 Shenzhen Sunell Technology Corporation. All rights reserved.

Dimensions (mm)

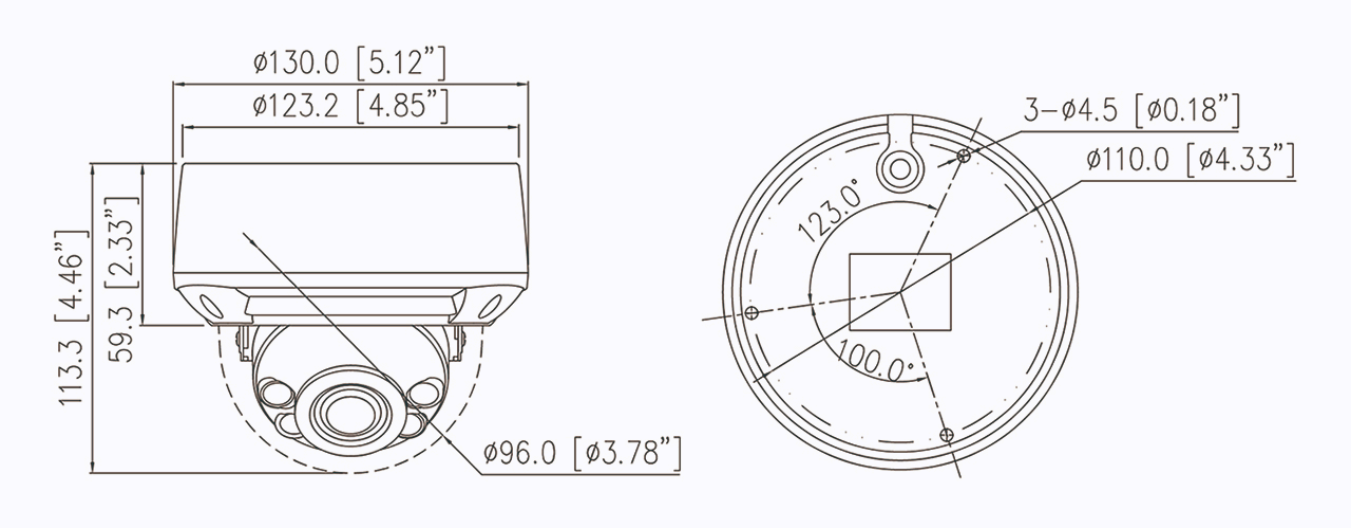

Accessories

Optional:

SN-CBK657
Junction Box

SN-CBK201
Pendant Cap

SN-CBK402
Ceiling Mount Bracket

SN-CBK501
Wall Mount Bracket

SN-CBK502
Wall Mount Bracket

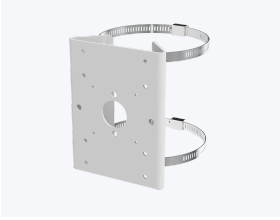

SN-CBK101
Pole Mount Bracket

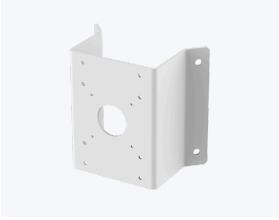

SN-CBK102
Corner Mount Bracket

SN-CBK901
In-ceiling Mount Bracket

Product specifications are subject to change without prior notice. For the latest Sunell product information, please visit www.sunellsecurity.com.
© 2026 Shenzhen Sunell Technology Corporation. All rights reserved.