SN-IPV8153EFAR-B

5MP IR Fixed Dome Network Camera

Key Features

- 1/2.7” progressive scan CMOS, up to 5MP (2880 × 1620) @ 25/30 fps
- Supports face, human, and vehicle detection with snapshot capture
- Intelligent analytics: Intrusion, smart motion detection, single line crossing, double line crossing, loitering, wrong-way detection, illegal parking, area people limit, perimeter detection, and people counting.
- True WDR(120dB), 3D DNR, ROI, HLC, BLC, Defog
- Smart IR distance up to 30 m
- Built-in microphone, 1/1 audio I/O, and 1/1 alarm I/O
- Built-in microSD card slot supporting up to 1 TB
- IP67, IK10-rated housing

Product specifications are subject to change without prior notice. For the latest Sunell product information, please visit www.sunellsecurity.com.
© 2026 Shenzhen Sunell Technology Corporation. All rights reserved.

Specifications

Camera	
Image Sensor	1/2.7” Progressive Scan CMOS
Max. Resolution	5MP, 2880(H) × 1620(V)
Shutter Speed	1/5 to 1/20,000s
Min. Illumination	Color: 0.05 Lux @ (F2.0, AGC ON), B/W: 0.01 Lux @ (F2.0, AGC ON), 0 Lux with IR on
Day & Night	Auto (ICR)
Angle Adjustment	Pan: 0° to 335°, Tilt: 0° to 75°, Rotation: 0° to 350°
Lens	
Lens Type	Fixed lens, fixed focal
Focal Length	2.8 mm
Max. Aperture	F2.0
Field of View (FOV)	H: 108.4°, V: 59.8°
Iris	Fixed Iris
Illuminator	
Illuminator Type	IR
IR wavelength	850 nm
Illumination Distance	Up to 30 m (98.4 ft)
Illuminator Control	Auto / Manual
Intelligent Analytics	
AI Multi-Target Detection	- Supports face, human, and vehicle detection with snapshot capture - Supports tracking display modes: Full Frame, Four-Corner Frame, and Mosaic
Intelligent Analysis	Intrusion, smart motion detection, single line crossing, double line crossing, loitering, wrong-way detection, illegal parking, area people limit, and perimeter detection - Supports alarm triggering based on specified target types (human/vehicle)
People Counting	Supported
Video & Audio	
Number of Streams	3 Streams
Resolution	Stream 1: 2880 × 1620, 2304 × 1296, 1920 × 1080, 1280 × 720 Stream 2: D1, VGA, CIF Stream 3: VGA, CIF, QVGA
Frame Rate	Up to 25/30 fps
Bit Rate Control	CBR/VBR

Product specifications are subject to change without prior notice. For the latest Sunell product information, please visit www.sunellsecurity.com.
© 2026 Shenzhen Sunell Technology Corporation. All rights reserved.

Bit Rate	Stream 1: 200 Kbps to 12 Mbps Stream 2: 100 Kbps to 6 Mbps Stream 3: 100 Kbps to 3 Mbps
Smart Encoding	Supported
Region of Interest (ROI)	Up to 8 zones
Audio Compression	G.711 A-law, G.711 µ-law, RAW_PCM
Audio Bit Rate	64 Kbps (G.711), 128 Kbps (RAW_PCM)
Image	
Image Adjustment	Brightness, Sharpness, Contrast, Saturation adjustable
Scene Mode	Indoor, Outdoor, Mirror, Corridor mode
Exposure Mode	Auto, Manual, Shutter priority
White Balance	Auto, Tungsten, Fluorescent, Daylight, Shadow, Manual
Day/Night Setting	Auto, Day mode, Night mode, Timer
Noise Reduction	2D/3D DNR
Image Enhancement	WDR, HLC, BLC, Defog
Wide Dynamic Range	True WDR (120 dB)
Privacy Masking	Up to 4 configurable zones
Event	
Alarm Triggers	IVS, Motion detection, Alarm input, Disk alarm, Network alarm, Day/Night switch alarm, Abnormal sound detection
Event Actions	Alarm record, FTP upload, Email notification, Alarm output, Snapshot, Audible alarm output
Network	
Protocols	IPv4/IPv6, HTTP/HTTPS, DNS, DDNS, DHCP, PPPoE, RTSP/ RTCP/RTP, TCP/UDP, NTP, ARP, UPnP, FTP, SMTP, QoS, ICMP, IGMP, SMTP, 802.1x, SNMP, Multicast
Application Programming Interface	ONVIF (Profile S/T/G/M), SDK, CGI
Max Concurrent Streams	10 channels
User/Host Level	32+ users, 3 user levels: Administrator, Operator, and Media User
Web Viewer	Chrome, Firefox, Microsoft Edge, IE11 or earlier
Security	
OS / Firmware Protect	Encrypted firmware, Secure boot, Signed firmware
User Authentication	Digest authentication, Brute-force attack protection
Network Authentication	IEEE 802.1X (EAP-TLS)
Secure Communication	HTTPS, WSS (WebSocket Secure), SRTP
Access Control	IP-based access control, Auto logout
Data Protect	Encryption credentials
Audit	Access, system, and event logs
Secure Storage	AES-256 encrypted SD card storage

Product specifications are subject to change without prior notice. For the latest Sunell product information, please visit www.sunellsecurity.com.

© 2026 Shenzhen Sunell Technology Corporation. All rights reserved.

Supply Chain Security	SBOM
Interface	
Network Interface	1 × RJ45 10/100 Mbps Ethernet port
Built-in Microphone	Supported
Audio Interface	1 input (3.5 mm), 1 output (3.5 mm)
Alarm Interface	1 input, 1 output
SD Card Slot	Built-in microSD card slot (up to 1 TB)
Reset Button	Supported
General	
Language	English, Chinese, Traditional Chinese, Polish, Italian, Portuguese, Spanish, Russian, French, Czech, Hungarian, Japanese, Korean. Default: English
Power Supply	12 VDC (-15% to +25%)/PoE (802.3af)
Power Consumption	Typical: 1.8 W (IR off, 12 VDC) / approx. 2.3 W (PoE) Max: 5.5 W (IR on, 12 VDC) / approx. 6.9 W (PoE)
Operating Temperature	-30 °C to 60 °C (-22 °F to 140 °F)
Operating Humidity	≤ 95% RH (Non-condensing)
Ingress Protection	IP67 (housing), IK10
Certifications	CE-EMC: EN 55032, EN IEC 61000-6-4, EN IEC 61000-6-2, EN 55035, EN 50130-4 FCC 47 CFR Part 15 Subpart B
Material	Aluminum alloy housing; PC dome cover
Dimensions	φ110 × 85.4 mm (φ4.33 × 3.36 inch)
Net Weight	Approx. 460 g (1.01 lb)
DORI Distance (EN 62676-4 standard)	
Detect	61 m (200.1 ft)
Observe	24.4 m (80.1 ft)
Recognize	12.2 m (40.0 ft)
Identify	6.1 m (20.0 ft)

Product specifications are subject to change without prior notice. For the latest Sunell product information, please visit www.sunellsecurity.com.
© 2026 Shenzhen Sunell Technology Corporation. All rights reserved.

Dimensions (mm)

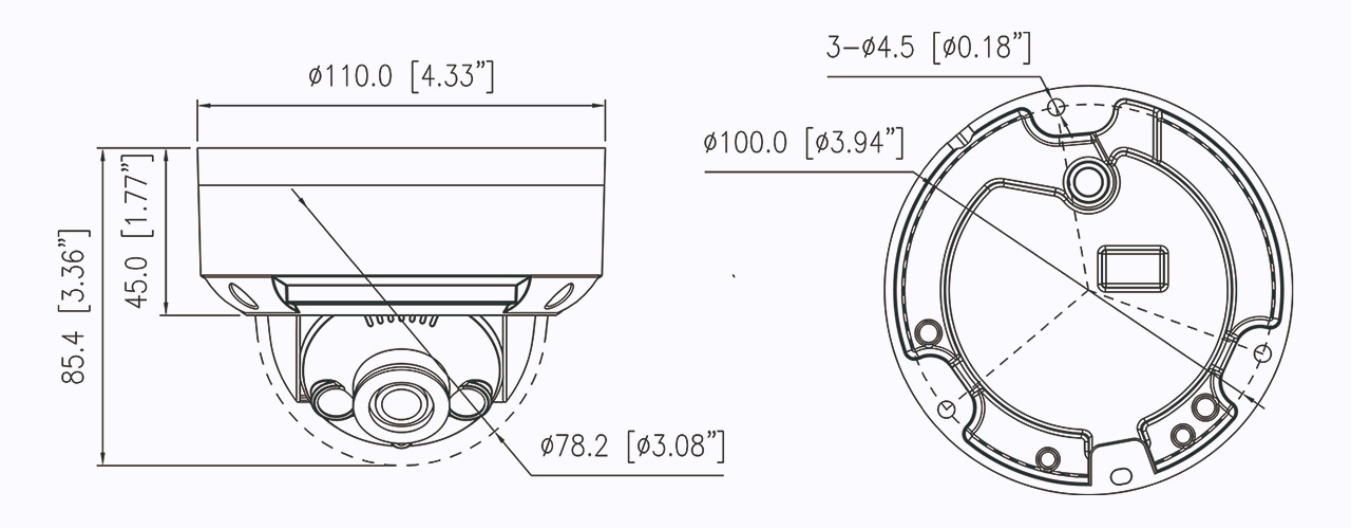

Accessories

Optional:

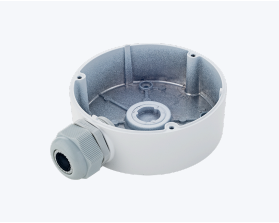

SN-CBK656
Junction Box

SN-BK382A
Wall Mount Bracket

SN-CBK202
Pendant Cap

SN-CBK402
Ceiling Mount Bracket

SN-CBK501
Wall Mount Bracket

SN-CBK502
Wall Mount Bracket

SN-CBK101
Pole Mount Bracket

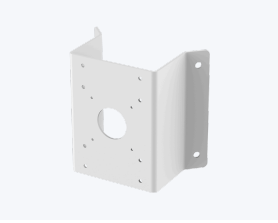

SN-CBK102
Corner Mount Bracket

Product specifications are subject to change without prior notice. For the latest Sunell product information, please visit www.sunellsecurity.com.
© 2026 Shenzhen Sunell Technology Corporation. All rights reserved.