# SN-IPV8153HCAS-B

**5MP Smart Dual Illumination Turret Network Camera**

## Key Features

- 1/2.7” progressive scan CMOS, up to 5MP (2880 × 1620) @ 25/30 fps
- Supports face, human, and vehicle detection with snapshot capture
- Intelligent analytics: Intrusion, smart motion detection, single line crossing, double line crossing, loitering, wrong-way detection, illegal parking, area people limit, perimeter detection, and people counting.
- True WDR(120dB), 3D DNR, ROI, HLC, BLC, Defog
- Built-in IR and warm light illumination up to 30 m
- Built-in microphone, 1/1 audio I/O, and 1/1 alarm I/O
- Built-in microSD card slot supporting up to 1 TB
- IP67-rated housing

Product specifications are subject to change without prior notice. For the latest Sunell product information, please visit www.sunellsecurity.com.
© 2026 Shenzhen Sunell Technology Corporation. All rights reserved.

## Specifications

| Camera | |
|---|---|
| Image Sensor | 1/2.7” Progressive Scan CMOS |
| Max. Resolution | 5MP, 2880(H) × 1620(V) |
| Shutter Speed | 1/5 to 1/20,000s |
| Min. Illumination | Color: 0.01 Lux @ (F1.6, AGC ON),<br>B/W: 0.005 Lux @ (F1.6, AGC ON), 0 Lux with illuminator on |
| Day & Night | Auto (ICR) |
| Angle Adjustment | Pan: 0° to 355°, Tilt: 0° to 80°, Rotation: 0° to 360° |
| **Lens** | |
| Lens Type | Fixed lens, fixed focal |
| Focal Length | 2.8 mm |
| Max. Aperture | F1.6 |
| Field of View (FOV) | H: 110.2°, V: 59.6° |
| Iris | Fixed Iris |
| **Illuminator** | |
| Illuminator Type | IR, Warm light |
| IR wavelength | 850 nm |
| Illumination Distance | IR distance up to 30 m (98.4 ft)<br>Warm light distance up to 20 m (65.6 ft) |
| Illuminator Control | IR mode, White mode, Intelligent mode, None |
| **Intelligent Analytics** | |
| AI Multi-Target Detection | - Supports face, human, and vehicle detection with snapshot capture<br>- Supports tracking display modes: Full Frame, Four-Corner Frame, and Mosaic |
| Intelligent Analysis | Intrusion, smart motion detection, single line crossing, double line crossing, loitering, wrong-way detection, illegal parking, area people limit, and perimeter detection<br>- Supports alarm triggering based on specified target types (human/vehicle) |
| People Counting | Supported |
| **Video & Audio** | |
| Number of Streams | 3 Streams |
| Resolution | Stream 1: 2880 × 1620, 2304 × 1296, 1920 × 1080, 1280 × 720<br>Stream 2: D1, VGA, CIF<br>Stream 3: VGA, CIF, QVGA |
| Frame Rate | Up to 25/30 fps |
| Bit Rate Control | CBR/VBR |

Product specifications are subject to change without prior notice. For the latest Sunell product information, please visit www.sunellsecurity.com.
© 2026 Shenzhen Sunell Technology Corporation. All rights reserved.

| | |
|---|---|
| Bit Rate | Stream 1: 200 Kbps to 12 Mbps<br>Stream 2: 100 Kbps to 6 Mbps<br>Stream 3: 100 Kbps to 3 Mbps |
| Smart Encoding | Supported |
| Region of Interest (ROI) | Up to 8 zones |
| Audio Compression | G.711 A-law, G.711 µ-law, RAW_PCM |
| Audio Bit Rate | 64 Kbps (G.711), 128 Kbps (RAW_PCM) |
| **Image** | |
| Image Adjustment | Brightness, Sharpness, Contrast, Saturation adjustable |
| Scene Mode | Indoor, Outdoor, Mirror, Corridor mode |
| Exposure Mode | Auto, Manual, Shutter priority |
| White Balance | Auto, Tungsten, Fluorescent, Daylight, Shadow, Manual |
| Day/Night Setting | Auto, Day mode, Night mode, Timer |
| Noise Reduction | 2D/3D DNR |
| Image Enhancement | WDR, HLC, BLC, Defog |
| Wide Dynamic Range | True WDR (120 dB) |
| Privacy Masking | Up to 4 configurable zones |
| **Event** | |
| Alarm Triggers | IVS, Motion detection, Alarm input, Disk alarm, Network alarm, Day/Night switch alarm, Abnormal sound detection |
| Event Actions | Alarm record, FTP upload, Email notification, Alarm output, Snapshot, Audible alarm output, White light alarm output |
| **Network** | |
| Protocols | IPv4/IPv6, HTTP/HTTPS, DNS, DDNS, DHCP, PPPoE, RTSP/ RTCP/RTP, TCP/UDP, NTP, ARP, UPnP, FTP, SMTP, QoS, ICMP, IGMP, SMTP, 802.1x, SNMP, Multicast |
| Application Programming Interface | ONVIF (Profile S/T/G/M), SDK, CGI |
| Max Concurrent Streams | 10 channels |
| User/Host Level | 32+ users, 3 user levels: Administrator, Operator, and Media User |
| Web Viewer | Chrome, Firefox, Microsoft Edge, IE11 or earlier |
| **Security** | |
| OS / Firmware Protect | Encrypted firmware, Secure boot, Signed firmware |
| User Authentication | Digest authentication, Brute-force attack protection |
| Network Authentication | IEEE 802.1X (EAP-TLS) |
| Secure Communication | HTTPS, WSS (WebSocket Secure), SRTP |
| Access Control | IP-based access control, Auto logout |
| Data Protect | Encryption credentials |
| Audit | Access, system, and event logs |

Product specifications are subject to change without prior notice. For the latest Sunell product information, please visit www.sunellsecurity.com.
© 2026 Shenzhen Sunell Technology Corporation. All rights reserved.

| | |
|---|---|
| Secure Storage | AES-256 encrypted SD card storage |
| Supply Chain Security | SBOM |
| **Interface** | |
| Network Interface | 1 × RJ45 10/100 Mbps Ethernet port |
| Built-in Microphone | Supported |
| Audio Interface | 1 input (3.5 mm), 1 output (3.5 mm) |
| Alarm Interface | 1 input, 1 output |
| SD Card Slot | Built-in microSD card slot (up to 1 TB) |
| Reset Button | Supported |
| **General** | |
| Language | English, Chinese, Traditional Chinese, Polish, Italian, Portuguese, Spanish, Russian, French, Czech, Hungarian, Japanese, Korean. Default: English |
| Power Supply | 12 VDC (-15% to +25%)/PoE (802.3af) |
| Power Consumption | Typical: 1.8 W (IR off, 12 VDC) / approx. 2.3 W (PoE)<br>Max: 4.9 W (IR on, 12 VDC) / approx. 6.2 W (PoE) |
| Operating Temperature | -30 °C to 60 °C (-22 °F to 140 °F ) |
| Operating Humidity | ≤ 95% RH (Non-condensing) |
| Ingress Protection | IP67 (housing) |
| Certifications | CE-EMC: EN 55032, EN IEC 61000-6-4, EN IEC 61000-6-2, EN 55035, EN 50130-4<br>FCC 47 CFR Part 15 Subpart B |
| Material | Aluminum alloy housing; PC components |
| Dimensions | φ118.2 × 93.9 mm (φ4.65 × 3.7 inch) |
| Net Weight | Approx. 535 g (1.18 lb) |
| **DORI Distance (EN 62676-4 standard)** | |
| Detect | 60 m (196.9 ft) |
| Observe | 24 m (78.7 ft) |
| Recognize | 12 m (39.4 ft) |
| Identify | 6 m (19.7 ft) |

Product specifications are subject to change without prior notice. For the latest Sunell product information, please visit www.sunellsecurity.com.
© 2026 Shenzhen Sunell Technology Corporation. All rights reserved.

## Dimensions (mm)

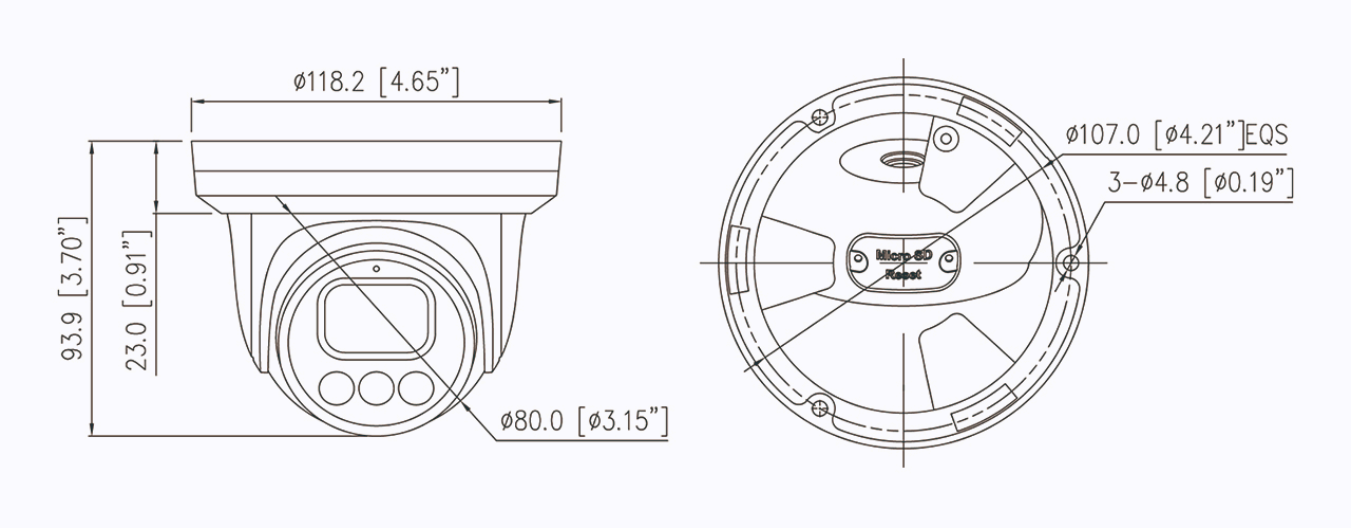


## Accessories

**Optional:**

SN-CBK646M
Junction Box

SN-BK382A
Wall Mount Bracket

SN-CBK203
Pendant Cap

SN-CBK402
Ceiling Mount Bracket

SN-CBK501
Wall Mount Bracket

SN-CBK502
Wall Mount Bracket

SN-CBK101
Pole Mount Bracket

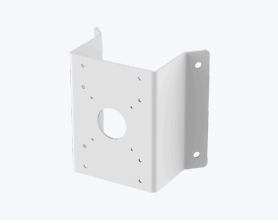

SN-CBK102
Corner Mount Bracket

Product specifications are subject to change without prior notice. For the latest Sunell product information, please visit www.sunellsecurity.com.
© 2026 Shenzhen Sunell Technology Corporation. All rights reserved.