SN-MV1090WAN-EC

9MP Machine Vision Network Camera

Key Features

- 1/1.1” GMOS
- Max. 9MP(4096×2160) @50/60fps resolution
- Optional 25mm / 35mm / 50mm fixed-focus lens with auto focus
- Supports face, human, and vehicle detection & capture.
- Supports human and vehicle attribute detection.
- Intelligent analytics: Intrusion, smart motion detection, single line crossing, double line crossing, loitering, wrong-way detection, area people limit, perimeter detection, illegal parking, running detection, fall detection, fight detection, and people counting.
- 2 RJ45, 4/2 alarm in/out, 3 RS-485, 1 RS-232, 1 USB
- Built-in microSD card slot (up to 1 TB)
- Supports 12 VDC / 24 VAC / PoE power supply

Design and specifications are subject to change without notice. The latest product information/ specification can be found at www.sunellsecurity.com
©2025-2026 Shenzhen Sunell Technologies Co., td. Al rights reserved.

Specifications

Camera	
Image Sensor	1/1.1” GMOS
Max Resolution	9MP, 4096(H) × 2160(V)
Shutter Speed	1/5 to 1/100,000 s
Min Illumination	Color: 0.001 Lux @ (F1.4, AGC ON), B/W: 0.0005 Lux @(F1.4, AGC ON)
Day & Night	Auto (ICR)
S/N Ratio	55dB
Lens	
Lens Type	Fixed lens, Auto focus
Focal Length	25 mm, 35 mm, 50 mm optional
Max. Aperture	- 25 mm: F1.4 - 35 mm: F1.4 - 50 mm: F1.5
Field of View (FOV)	- 25 mm: H 32.8° , V 17.2° - 35 mm: H 23.7° , V 12.5° - 50 mm: H 16.7° , V 8.8°
Iris	Fixed Iris
Intelligent Analytics	
AI Multi-Target	- Supports face, human, and vehicle detection & capture. - Supports human and vehicle attribute detection. - Supports multiple frame modes: Full Frame, Four-Corner Frame, Mosaic.
Attribute Extraction	Human Attributes: Gender, age, glasses, hat, bag, upper clothing color & style, lower clothing color & style, reflective vest. Vehicle Attributes: Type, color, brand, orientation.
Intelligent Analysis	Intrusion detection, smart motion detection, single line crossing, double line crossing, loitering, wrong-way detection, area people limit, perimeter detection, illegal parking, running detection, fall detection, fight detection. - Supports accurate target classification (human/vehicle)
People Counting	Supported
Video & Audio	
Number of Streams	3 Streams
Resolution	Stream1: 4096×2160, 2592×1944, 2592×1520, 2560×1440, 2304×1296, 1920×1080, 1280×720 Stream2: D1, VGA, CIF Stream3: VGA, CIF, QVGA
Frame Rate	Up to 50/60fps
Bit Rate Control	CBR/VBR

Design and specifications are subject to change without notice. The latest product information/ specification can be found at www.sunellsecurity.com
©2025-2026 Shenzhen Sunell Technologies Co., td. Al rights reserved.

Bit Rate	Stream1: 200 kbps to 36 Mbps Stream2: 100 kbps to 6 Mbps Stream3: 100 kbps to 3 Mbps
Smart Encoding	Supported
Region of Interest (ROI)	8 areas
Image	
Image Adjustment	Brightness, Sharpness, Contrast, Saturation
Scene Mode	Indoor, Outdoor, Mirror, Corridor mode
Exposure Mode	Auto, Manual, Shutter priority
White Balance	Auto, Tungsten, Fluorescent, Daylight, Shadow, Manual
Day/Night Setting	Auto, Day mode, Night mode, Timer
Noise Reduction	2D/3D DNR
Image Enhancement	WDR, HLC, BLC, Defog
Wide Dynamic Range	DWDR
Privacy Masking	4 areas
Event	
Alarm Triggers	IVS, Motion detection, Alarm input, Network alarm, Disk alarm, Day/Night switch alarm
Event Actions	Alarm record, Alarm output, FTP upload, SMTP upload
Network	
Protocols	IPv4/IPv6, HTTP/HTTPS, DNS, DDNS, DHCP, PPPoE, RTSP/ RTCP/RTP, TCP/UDP, NTP, ARP, UPnP, FTP, SMTP, QoS, ICMP, IGMP, SMTP, 802.1x, SNMP, Multicast
Application Programming Interface	ONVIF (Profile S/T/G/M), SDK, CGI
Max Concurrent Streams	10 channels
User/Host Level	32+ users, 3 user levels: Administrator, Operator, Media user
Web Viewer	<IE11, Chrome, Firefox, Microsoft Edge
Security	
OS / Firmware Protect	Encrypted firmware, Secure boot, Signed firmware
User Authentication	Digest authentication, Prevent brute-force attack
Network Authentication	IEEE 802.1X (EAP-TLS)
Secure Communication	HTTPS, WSS (WebSocket Secure), SRTP
Access Control	IP-based access control, Auto logout
Data Protect	Encryption credentials
Audit	Access / System / Event Log management
Secure Storage	SDcard partition encrypt (AES-256), Secure element
Supply Chain Security	SBOM
Interface	

Design and specifications are subject to change without notice. The latest product information/ specification can be found at www.sunellsecurity.com
©2025-2026 Shenzhen Sunell Technologies Co., td. Al rights reserved.

Network Interface	2 × RJ45 10/100/1000 Mbps Self-Adaptive Ethernet Interfaces
Alarm Interface	4 × Input; 2 × Output
Control Interface	3 × RS-485; 1 × RS-232
Wiegand Port	1 × Wiegand (26-bit, SHA-1 26-bit, 34-bit, and NEWG 72-bit)
CVBS Output	1 × BNC
SD Card Slot	Built-in, up to 1 TB
Reset Button	Supported
General	
Language	English, Chinese, Traditional Chinese, Polish, Italian, Portuguese, Spanish, Russian, French, Czech, Hungarian, Japanese, Korean. Default: English
Power Supply	12 VDC / 24 VAC / PoE (802.3af)
Power Consumption	Max. 10 W (12 VDC) / approx. 12 W (PoE)
Operating Temperature	-30°C to 55°C (-22°F to 131°F)
Operating Humidity	Less than 90% RH
Ingress Protection	N/A
Certifications	CE/FCC
Material	Metal
Dimensions	194.8 × 99 × 91 mm (7.67 × 3.9 × 3.58 inch)
Net Weight	Approx. 990 g (without lens)

Dimensions (mm)

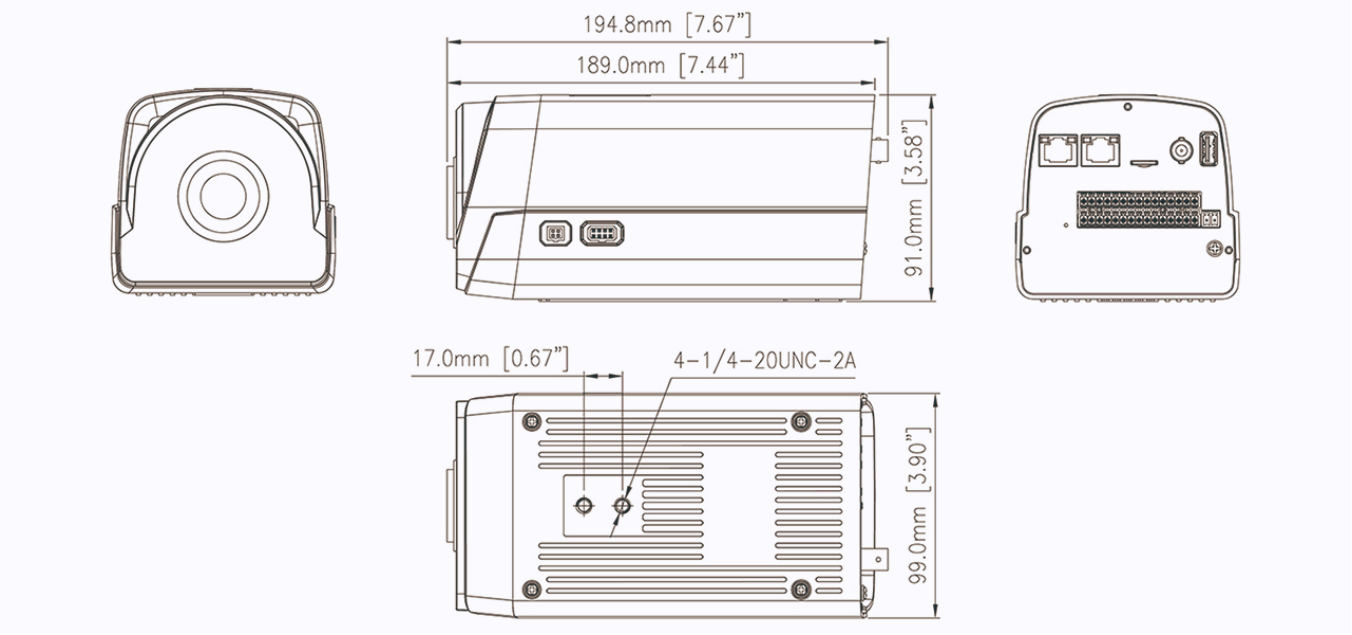

Design and specifications are subject to change without notice. The latest product information/ specification can be found at www.sunellsecurity.com
©2025-2026 Shenzhen Sunell Technologies Co., td. Al rights reserved.