SN-XVR3916E2-J

16-ch 4K 2HDD Hybrid DVR

Key Features

- Multi-format video inputs (AHD, TVI, CVI, CVBS, and IP)
- Up to 32-channel IP camera inputs, up to 1080P per channel
- Up to 8MP @ 7 fps recording
- 16-channel deep learning-based Perimeter Protection
- HDMI and VGA simultaneous video output
- Audio over coaxial cable
- Smart search and playback
- Multiple languages

Product specifications are subject to change without prior notice. For the latest Sunell product information, please visit www.sunellsecurity.com.
© 2026 Shenzhen Sunell Technology Corporation. All rights reserved.

Specifications

Video & Audio	
Analog Video Input	16 × BNC (supports UTC coaxial control)
AHD Input	8MP, 5MP, 4MP, 1080P, 720P
TVI Input	8MP, 5MP, 4MP, 1080P, 720P
CVI Input	8MP, 5MP, 4MP, 1080P, 720P
CVBS Input	PAL / NTSC
IP Video Input	16-ch (up to 32-ch in IP mode), up to 1080P per channel
Audio Input	4 × RCA; up to 16-ch audio over coaxial cable (TVI only)
Audio Output	1 × RCA
Two-way Audio	Supported via RCA and network (half-duplex intercom)
Audio Compression	G.711A / G.711U
Recording	
Recording Resolution	8MP, 5MP, 4MP, 1080P, 720P, D1
Recording Frame Rate	8MP @ 7 fps, 5MP @ 12 fps, 4MP @ 15 fps, 1080P @ 25/30 fps
Video Bit Rate	Main stream: 128 Kbps to 6144 Kbps; Sub stream: 16 Kbps to 1024 Kbps
Dual Stream	Supported
Recording Mode	Manual, Scheduled, Event
Perimeter Protection	
Intrusion Detection	16-ch, supports selectable target types (human, vehicle, or both)
Event	
Event Trigger	Motion Detection, Video Loss, Video Tampering, Alarm Input, Exception
Event Linkage	Recording, Email, Buzzer, PTZ, Alarm Output, Push Notification
Display	
Decoding Capability	1-ch @ 4K, 4-ch @ 4K, 16-ch @ 1080P
HDMI Output	HDMI 1: 3840 × 2160, 1920 × 1080, 1280 × 1024, 1024 × 768 HDMI 2: 1920 × 1080, 1280 × 1024, 1024 × 768
VGA Output	1920 × 1080, 1280 × 1024, 1024 × 768
CVBS Output	1 × BNC
Video Output Mode	Supports independent main and auxiliary screen display
Display Layouts	Default Mode (Mirrored): 1/4/8/9/16/32 Auxiliary Screen Mode: - Main Screen: 1/4/8/9/16 - Auxiliary Screen: 1/4/8/9/16

Product specifications are subject to change without prior notice. For the latest Sunell product information, please visit www.sunellsecurity.com.
© 2026 Shenzhen Sunell Technology Corporation. All rights reserved.

Playback & Backup	
Simultaneous Playback	16-ch / 9-ch / 4-ch / 1-ch
Search Mode	Date/Time, Alarm, Picture, Event
Playback Control	Play, Pause, Fast Forward, Rewind, Slow Playback, Digital Zoom
Backup Mode	USB Device, Network
Network	
Network Interface	2 × RJ45, 10/100/1000 Mbps self-adaptive Ethernet port
Protocols	HTTP, HTTPS, TCP/IP, IPv4, IPv6, UDP, RTSP, SMTP, NTP, DNS, DHCP, UPnP, DDNS, P2P, IP Filter, IEEE 802.1X, SNMP
Remote Users	Up to 4 users
Mobile Client	iOS, Android
Interoperability	ONVIF, SDK, CGI
Storage	
HDD Interface	2 × SATA interfaces
HDD Capacity	Up to 8 TB per HDD
Disk Group	Supported
Interface	
USB Interface	1 × USB 2.0 port (front panel), 2 × USB 3.0 ports (rear panel)
Alarm Input	8
Alarm Output	2
RS-485	1
Reset Button	On-board reset button
General	
Power Supply	12 VDC, 3 A
Power Consumption	≤ 10 W (without HDD)
Operating Temperature	-10 °C to 50 °C (14 °F to 122 °F)
Operating Humidity	≤90% RH (Non-condensing)
Certifications	CE-EMC: EN 55032, EN IEC 61000-3-2, EN 61000-3-3, EN 55035 CE-LVD: EN IEC 62368-1 FCC: 47 CFR Part 15, Subpart B
Dimensions	372 × 311.2 × 46.5 mm (14.65 × 12.25 × 1.83 inch)
Net Weight	Approx. 2.26 kg (4.98 lb) without HDD

Product specifications are subject to change without prior notice. For the latest Sunell product information, please visit www.sunellsecurity.com.
© 2026 Shenzhen Sunell Technology Corporation. All rights reserved.

Dimensions (mm)

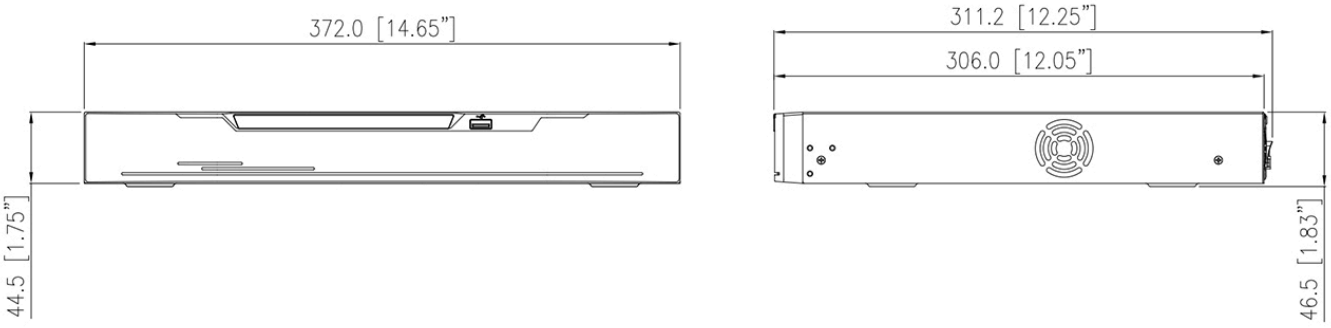

Rear Panel

Product specifications are subject to change without prior notice. For the latest Sunell product information, please visit www.sunellsecurity.com.
© 2026 Shenzhen Sunell Technology Corporation. All rights reserved.